CITY OF TORRINGTON, CONNECTICUT

DEPARTMENT OF PUBLIC WORKS

WATER POLLUTION CONTROL AUTHORITY

EAST BASIN SEWER REHABILITATION PROJECT

BID #EBS-041-053016

MAY 2016

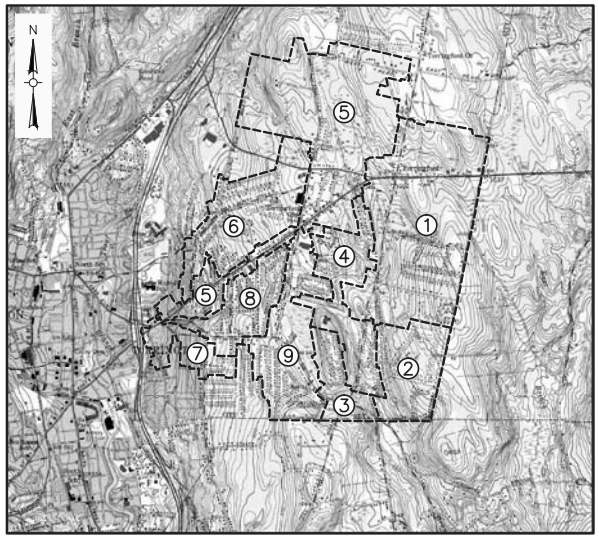

LOCATION MAP
SCALE: 1"=2,000'

DRAWING INDEX

SHEET	DRAWING NO.	TITLE
1	--	COVER
2	G-1	ABBREVIATIONS, NOTES, AND LEGEND
3	C-1	SUBBASIN 1 REHABILITATION LOCATION PLAN AND TABLES
4	C-2	SUBBASIN 1 REHABILITATION LOCATION PLAN AND TABLES
5	C-3	SUBBASIN 2 REHABILITATION LOCATION PLAN AND TABLES
6	C-4	SUBBASIN 3 AND SUBBASIN 4 REHABILITATION LOCATION PLAN AND TABLES
7	C-5	SUBBASIN 4 REHABILITATION LOCATION PLAN AND TABLES
8	C-6	SUBBASIN 5 REHABILITATION LOCATION PLAN AND TABLES
9	C-7	SUBBASIN 5 REHABILITATION LOCATION PLAN AND TABLES
10	C-8	SUBBASIN 5 REHABILITATION LOCATION PLAN AND TABLES
11	C-9	SUBBASIN 6 REHABILITATION LOCATION PLAN AND TABLES
12	C-10	SUBBASIN 6 REHABILITATION LOCATION PLAN AND TABLES
13	C-11	SUBBASIN 7 REHABILITATION LOCATION PLAN AND TABLES
14	C-12	SUBBASIN 8 REHABILITATION LOCATION PLAN AND TABLES
15	C-13	SUBBASIN 9 REHABILITATION LOCATION PLAN AND TABLES
16	C-14	SUBBASIN 9 REHABILITATION LOCATION PLAN AND TABLES
17	C-15	DETAILS
18	C-16	DETAILS

Weston&Sampson®
273 Dividend Road, Rocky Hill, Connecticut 06067
Phone: (860) 513-1473 Fax: (860) 513-1483

R:\Torrington CT\Wastewater Services\Task Order 1 - Sewer Rehab\Rehab CAD\SEWER REHAB

LEGEND

DESCRIPTION	EXISTING	PROPOSED
SANITARY SEWER	S	8"S PVC
FORCE MAIN	FM	6"FM DI
WATER MAIN	W	8"W DI
TEMPORARY WATER		4"W
STORM DRAIN	D	18"D RCP
GAS	G	4"G
ELECTRIC	E	E
TELEPHONE	T	T
HOUSE CONNECTION		SS
WATER SERVICE	WS	WS
GRINDER PUMP	GP	GP
SANITARY SEWER MANHOLE	S	SMH
STORM DRAIN MANHOLE	D	DMH
ELECTRICAL MANHOLE	E	
TELEPHONE MANHOLE	T	
AIR RELEASE VALVE MANHOLE		ARMH
FORCE MAIN CLEANOUT MANHOLE		FMMH
CLEANOUT		CO
CATCH BASIN		
HYDRANT		
TEMPORARY HYDRANT		H
GATE VALVE		
CHECK VALVE		
BUTTERFLY VALVE		
BALL VALVE		
CURB STOP		
REDUCER		
CAP OR PLUG		
GAS GATE VALVE		
UTILITY POLE		
GUY POLE		
GUY WIRE		
OVERHEAD WIRES	OHW	
LIGHT POST		
EDGE OF PAVEMENT		
EDGE OF UNPAVED ROAD		
CURB		
SIDEWALK		
STONE WALL		
RETAINING WALL	RET WALL	RET WALL
WIRE FENCE	X	
CHAIN LINK FENCE	O	O
DECIDUOUS TREE		
EVERGREEN TREE		
TREE LINE		
SURVEY MARKER		
CONTROL POINT		
BENCH MARK		
PROPERTY LINE		
EASEMENT LINE		
CONTOUR	56	56
SPOT ELEVATIONS	× 100.2	×101.5
BUILDING/BUILDING NUMBER	#35	
FLOOR ELEVATION	FF=56.7	
SILL ELEVATION	S=56.7	
LIMIT OF WORK		
WETLAND/WETLAND FLAG		
EDGE OF WATER		
DRAINAGE DITCH/SWALE		
RIP RAP		
BOLLARD	B	
SIGN		
GUIDE RAIL		
PERCOLATION TEST	PT1	PT-1
TEST PIT	TP1	TP-1
BORING	B1	B4
PROBE	P-1	P-1
GROUNDWATER MONITORING WELL	WSE-1	GW-1
HAY BALES		
SILT FENCE		
ROCK OUTCROP		

NOTE: ITEMS SHOWN IN THE LEGEND MAY NOT BE PRESENT IN THESE PLANS

ABBREVIATIONS

AC	ASBESTOS CEMENT PIPE
ACCMP	ASPHALT COATED CORRUGATED METAL PIPE
ARV	AIR RELEASE VALVE
ASTM	AMERICAN SOCIETY FOR TESTING AND MATERIALS
BC	BITUMINOUS CONCRETE
BIT	BITUMINOUS
BLDG	BUILDING
BM	BENCH MARK
BO	BLOW OFF
BV	BUTTERFLY VALVE
CATV	CABLE TELEVISION
CB	CATCH BASIN
CC	CONCRETE CURB
CI	CAST IRON
℄	CENTERLINE
CL	CEMENT LINED
CMP	CORRUGATED METAL PIPE
CONC	CONCRETE
CU FT	CUBIC FEET
CY	CUBIC YARD
D	STORM DRAIN, DEPTH FROM RIM TO INVERT
DI	DROP INLET, DUCTILE IRON
DIA	DIAMETER
DMH	DRAIN MANHOLE
DWG	DRAWING
E	EAST, ELECTRIC
EA	EACH
EF	EACH FACE
ELEV	ELEVATION
EOP	EDGE OF PAVEMENT
EW	EACH WAY
EXIST	EXISTING
FLG	FLANGE
FT	FEET, FOOT
G	NATURAL GAS
GALV	GALVANIZED
GC	GRANITE CURB
GR	GRANITE
HC	HOUSE CONNECTION
HORIZ	HORIZONTAL
HP	HIGH PRESSURE
HYD	FIRE HYDRANT
I	INVERT
INV	INVERT
ID	INSIDE DIAMETER
IP	IRON PIPE
LB	POUND
LF	LINEAR FEET
LS	LUMP SUM
MAX	MAXIMUM
MB	MAIL BOX
MECH	MECHANICAL
MH	MANHOLE
MIN	MINIMUM
MISC	MISCELLANEOUS
MJ	MECHANICAL JOINT
N	NORTH
NE	NORTH EAST
NW	NORTH WEST
NF	NOT FOUND
NO OR #	NUMBER
OD	OUTSIDE DIAMETER
PCCP	PRESTRESSED CONCRETE CYLINDER PIPE
PE	PLAIN END, POLYETHYLENE
ℙ	PROPERTY LINE
PL	PLATE
PVC	POLYVINYL CHLORIDE
PVMT	PAVEMENT
RCP	REINFORCED CONCRETE PIPE
ROW	RIGHT-OF-WAY
RQD	ROCK QUALITY
S	SEWER, SOUTH
SE	SOUTH EAST
SECT	SECTION
SF	SQUARE FEET
SHT	SHEET
SPEC	SPECIFICATIONS
SQ FT	SQUARE FEET
SS	SEWER SERVICE, STAINLESS STEEL
STA	STATION
STL	STEEL
SW	SIDEWALK, SOUTH WEST
T	HYDROSTATIC THRUST, TELEPHONE
TBM	TEMPORARY BENCH MARK
THK	THICK (NESS)
TYP	TYPICAL
UP	UTILITY POLE
VC	VITRIFIED CLAY
VERT	VERTICAL
W	WATER, WEST
W/	WITH
W/O	WITHOUT

GENERAL NOTES:

1. PLANS ILLUSTRATE APPROXIMATE LOCATIONS OF MANHOLES AND SEWERS. REFER TO THE TABLES ON SHEETS C-1 THROUGH C-11 FOR THE APPROXIMATE LINEAR FEET OF SEWER BETWEEN MANHOLES AND THE APPROXIMATE STATION LOCATIONS OF REHABILITATIONS. SEE TELEVISION INSPECTION LOGS IN APPENDIX A OF THE SPECIFICATIONS FOR MORE INFORMATION. ACTUAL LOCATIONS AND MEASUREMENTS TO BE FIELD VERIFIED BY THE CONTRACTOR.
2. ELEVATIONS REFERENCED ARE FROM THE CITY OF TORRINGTON'S GIS DATABASE.
3. EXISTING SEWER AND PROPERTY LINE INFORMATION WAS TAKEN FROM THE CITY OF TORRINGTON'S GIS DATABASE.
4. EXISTING UTILITIES, TOPOGRAPHY, EDGE OF PAVEMENT, UTILITY POLE LOCATIONS, AND LOCATIONS OF EXISTING ABOVE GROUND STRUCTURES WERE FIELD SURVEYED BY WESTON & SAMPSON ENGINEERS, INC.
5. PLANS ILLUSTRATE APPROXIMATE LOCATIONS OF MANHOLES AND SEWERS. REFER TO THE TABLES ON EACH SHEET FOR THE APPROXIMATE LINEAR FEET OF SEWER BETWEEN MANHOLES AND THE APPROXIMATE STATION LOCATIONS OF REHABILITATIONS. THESE LOCATIONS SHOULD BE FIELD VERIFIED BY THE CONTRACTOR.
6. MANHOLE DEPTHS AND DIAMETERS ARE APPROXIMATE.
7. IN SITUATIONS WHERE WORK IS LOCATED OFF A PUBLIC STREET, THE 'STREET / LOCATION' FIELD OF THE TABLE INDICATES THE CLOSEST STREET.
8. CONTRACTOR SHALL PROVIDE ALL PROJECT VIDEO FILES ON AN EXTERNAL HARD DRIVE AT THE CONCLUSION OF THE PROJECT AS DESCRIBED IN SPECIFICATION SECTION 01331 DOCUMENTATION.
9. MANHOLES AND LINE SEGMENTS WITH WORK TO BE PERFORMED ARE SHOWN ON THE PLANS. WHERE THERE IS A DISCREPANCY BETWEEN THE BOLDED MANHOLE / LINE SEGMENTS AND THE WORK TABLES, THE WORK TABLES SHALL CONTROL.
10. WHERE THERE IS A DISCREPANCY BETWEEN THE SPECIFICATIONS AND THE WORK TABLES, THE WORK TABLES SHALL CONTROL.
11. CONTRACTOR SHALL BE AWARE THAT SOME WORK IS LOCATED IN EASEMENTS AND CROSS COUNTRY AREAS.

CONSTRUCTION NOTES:

1. THE CONTRACTOR SHALL CALL "CALL BEFORE YOU DIG" AT 1-800-922-4455 AT LEAST 72 HOURS, SATURDAYS, SUNDAYS, AND HOLIDAYS EXCLUDED, PRIOR TO EXCAVATING AT ANY LOCATION. A COPY OF THE "CALL BEFORE YOU DIG" PROJECT REFERENCE NUMBER(S) SHALL BE GIVEN TO THE OWNER PRIOR TO EXCAVATION.
2. TEST PITS TO LOCATE EXISTING UTILITIES MAY BE REQUIRED BY THE ENGINEER.
3. STONE WALLS, FENCES, MAIL BOXES, SIGNS, CURBS, LIGHT POLES, ETC.. SHALL BE REMOVED AND REPLACED AS NECESSARY TO PERFORM THE WORK. UNLESS OTHERWISE INDICATED, ALL SUCH WORK SHALL BE INCIDENTAL TO CONSTRUCTION OF THE PROJECT.
4. ALL PAVEMENT DISTURBED BY THE CONTRACTOR'S OPERATIONS SHALL BE REPLACED IN ACCORDANCE WITH THE SPECIFICATIONS AND CITY OR STATE REQUIREMENTS AT NO ADDITIONAL COST TO THE OWNER.
5. ALL WORK PERFORMED WITHIN STATE HIGHWAY LIMITS SHALL CONFORM TO THE PERMIT ISSUED FOR THIS PROJECT.
6. FORM BRICK INVERTS IN MANHOLES WITH BRICK ON EDGE TO A DEPTH OF 0.8 INSIDE DIAMETER OF PIPE AND FORM A 1 INCH SLOPED BENCH WITH BRICK FLAT. INVERT SHALL BE SLOPED UNIFORMLY BETWEEN INLET AND OUTLET PIPE AND SHALL BE FORMED AND FILLED AS REQUIRED TO DIRECT THE FLOW AS INDICATED AND TO PREVENT DEPOSITION OF SOLIDS.
7. IN PAVED AREAS THE TOP OF THE MANHOLE COVER SHALL BE SET FLUSH WITH THE PAVED SURFACE. IN OTHER AREAS THE TOP OF THE COVER SHALL EXTEND 6 INCHES ABOVE FINISHED GRADE, OR AS SHOWN ON THE DRAWINGS, OR AS REQUIRED BY THE ENGINEER.
8. THE CONTRACTOR SHALL NOT STORE ANY APPARATUS, MATERIALS, SUPPLIES, OR EQUIPMENT ON DRAINAGE STRUCTURES OR WITHIN 100 FEET OF WETLANDS.
9. THE CONTRACTOR MUST GIVE THE ENGINEER, THE OWNER, AND THE OWNER'S WETLANDS ENFORCEMENT OFFICER AT LEAST 10 DAYS' NOTICE PRIOR TO PERFORMING ANY WORK IN WETLANDS.
10. CONTRACTOR SHALL MAINTAIN EXISTING FLOWS IN THE SYSTEM, BYPASSING AS NECESSARY TO PREVENT SURCHARGING, AS APPROVED OR REQUIRED BY THE ENGINEER.
11. NO PAYMENT WILL BE MADE FOR ADDITIONAL CLEANING. CONTRACTOR MUST REFER TO TELEVISION INSPECTION LOGS TO DETERMINE EXTENT OF CLEANING REQUIRED.
12. THE CONTRACTOR SHALL COORDINATE WITH THE TORRINGTON WATER COMPANY FOR USE OF WATER FOR CONSTRUCTION PURPOSES. THE EXPRESS APPROVAL OF THE OWNER SHALL BE OBTAINED BEFORE WATER IS USED. WASTE OF WATER BY THE CONTRACTOR SHALL BE SUFFICIENT CAUSE FOR WITHDRAWING THE PRIVILEGE OF UNRESTRICTED USE. IF WATER IS NOT AVAILABLE IN SUFFICIENT SUPPLY, THE CONTRACTOR SHALL SUPPLY WATER AT NO ADDITIONAL COST TO THE OWNER.
13. THE CONTRACTOR SHALL CONDUCT ALL CONSTRUCTION ACTIVITY BETWEEN 7:00 a.m. AND 5:00 p.m., MONDAY THROUGH FRIDAY. THE CONTRACTOR WILL HAVE TO COORDINATE WITH LOCAL BUSINESS OWNERS AND SCHOOLS IN ORDER TO PERFORM THE WORK REQUIRED WITHOUT INTERRUPTION OF LOCAL BUSINESSES OR CLASSES. NO CONSTRUCTION WORK SHALL BE ALLOWED ON SATURDAYS, SUNDAYS OR HOLIDAYS WITHOUT WRITTEN AUTHORIZATION FROM THE OWNER. THE CONTRACTOR SHALL LIMIT CONSTRUCTION ACTIVITY TO BETWEEN 8:00 a.m. AND 3:30 p.m. ON MAJOR COMMUTER ROUTES AS SPECIFIED BY THE TORRINGTON POLICE DEPARTMENT.
14. CONTRACTOR MAY STORE EQUIPMENT AND PARK VEHICLES AT THE CITY'S STREET FACILITY AS REQUIRED. CONTRACTOR SHALL BE RESPONSIBLE FOR ASSOCIATED COORDINATION WITH THE CITY AND THE STREET FACILITY.
15. CONTRACTOR IS RESPONSIBLE FOR SCHEDULING OF UNIFORMED POLICE OFFICERS, POLICE CRUISERS, AND ROAD FLAGGERS. AS PER THE RECOMMENDATION OF THE CHIEF OF POLICE, UNIFORMED OFFICERS, POLICE CRUISERS, AND ROAD FLAGGERS WILL BE REQUIRED AT THE LOCATIONS LISTED ON DRAWING G-1.
16. LOCATIONS OF EXISTING PIPES, CONDUITS, UTILITIES, FOUNDATIONS AND OTHER UNDERGROUND OBJECTS ARE NOT WARRANTED TO BE CORRECT AND THE CONTRACTOR SHALL HAVE NO CLAIM ON THAT ACCOUNT SHOULD THEY BE OTHER THAN SHOWN.
17. ALL AREAS DISTURBED BY THE CONTRACTOR BEYOND PAYMENT LIMITS SHALL BE RESTORED AT NO ADDITIONAL COST TO THE OWNER.
18. LOCATION OF SEWER SERVICE CONNECTIONS ON PLANS IS APPROXIMATE. IT IS THE CONTRACTOR'S RESPONSIBILITY TO VERIFY QUANTITY AND LOCATION OF ALL SEWER SERVICE CONNECTIONS PRIOR TO PERFORMING C.I.P.P.
19. NO CAPPED SERVICE CONNECTIONS SHALL BE REINSTATED.
20. THE CONTRACTOR SHALL MAINTAIN LOCAL TRAFFIC TO ALL STREETS THROUGHOUT THE DURATION OF THE PROJECT.

UNIFORMED OFFICERS FOR TRAFFIC CONTROL

SUBBASIN	STREET/LOCATION	UNIFORMED OFFICERS
1	TORRINGFORD STREET	STATE
1	CHESTNUT HILL ROAD	LOCAL
1	ALBRECHT ROAD	LOCAL
1	LOUIS CIRCLE	LOCAL
1	LONGMEADOW DRIVE	LOCAL
1	DOROTHY DRIVE	LOCAL
1	FARMSTEAD LANE	LOCAL
1	COUNTY ROAD	LOCAL
2	COUNTY ROAD	LOCAL
2	NEW HARWINTON ROAD	STATE
2	DUTTON HILL ROAD	LOCAL (2)
2	LORETTA ROAD	LOCAL
2	VILLAGE LANE	LOCAL
3	NEW HARWINTON ROAD	STATE
4	NUTMEG DRIVE	LOCAL
4	BROWNSTONE DRIVE	LOCAL
4	LIMESTONE DRIVE ROW	LOCAL
4	TUNXIS LANE ROW	LOCAL
4	TORRINGFORD STREET	STATE
4	BELMONT DRIVE	LOCAL
4	MOORE DRIVE ROW	LOCAL
4	LIMESTONE DRIVE	LOCAL
4	GREENRIDGE ROAD	LOCAL
5	EAST MAIN STREET	STATE
5	ARLENE STREET	LOCAL
5	WHEELER LANE	LOCAL
5	IRVING AVENUE	LOCAL
5	ADELAIDE TERRACE	LOCAL
5	TORRINGFORD WEST	LOCAL (2)
5	DURAND STREET	LOCAL
5	DIBBLE STREET	LOCAL (2)
5	WINDTREE LANE	LOCAL
5	ALLISON DRIVE	LOCAL

SUBBASIN	STREET/LOCATION	UNIFORMED OFFICERS
6	CHARLES STREET	LOCAL (2)
6	TICONDEROGA DRIVE	LOCAL
6	CONCORD ROAD	LOCAL
6	REVERE STREET	LOCAL
6	SIMMONS STREET	LOCAL
6	LISLE STREET	LOCAL
6	LEXINGTON AVENUE	LOCAL
6	PUTNAM STREET	LOCAL
6	MEADOWVIEW DRIVE	LOCAL
6	ALVORD PARK ROAD	LOCAL
6	CHAMBERLAIN STREET	LOCAL
6	LINDBERG STREET	LOCAL
6	KNOLLWOOD STREET	LOCAL (2)
6	BONVICINI DRIVE	LOCAL
6	PILGRIM DRIVE	LOCAL
7	HILLSIDE AVENUE	LOCAL (2)
7	HORNFISCHER TERRACE	LOCAL
7	BENPORTE TERRACE	LOCAL
7	BARTON STREET	LOCAL
7	DARLING STREET	LOCAL
7	CLEARVIEW AVENUE	LOCAL
7	FREDERICK STREET	LOCAL
7	SILBRO DRIVE	LOCAL
7	APTER DRIVE	LOCAL
8	CRESTWOOD ROAD	LOCAL
8	HARTFORD AVENUE	LOCAL
8	PINERIDGE ROAD	LOCAL
8	BEVERLY ROAD	LOCAL
9	FAIRLAWN DRIVE	LOCAL
9	EDGEWOOD DRIVE	LOCAL
9	HIGHFIELD DRIVE	LOCAL
9	TORRINGFORD WEST STREET	LOCAL (2)
9	SCOTT DRIVE	LOCAL
9	LYMAN DRIVE	LOCAL
9	MORNINGSIDE DRIVE	LOCAL
9	SUNRISE DRIVE	LOCAL
9	HARVARD DRIVE	LOCAL
9	PFEFFER LANE	LOCAL

Weston&Sampson®
273 Dividend Road, Rocky Hill, CT 06067
(860) 513-1473 (800) SAMPSON
www.westonandsampson.com

No.	Date	Dr.By	Ck.By	App.By	Description
A	P	P	R	O	V E D

REGISTERED PROFESSIONAL ENGINEER — DATE: May 9, 2016

CITY OF TORRINGTON, CONNECTICUT
DEPARTMENT OF PUBLIC WORKS – WATER POLLUTION CONTROL AUTHORITY
EAST TORRINGTON SEWER REHABILITATION PRJECT

ABBREVIATIONS, NOTES AND LEGEND

FILE NAME	JOB NO.	SCALE	DR.BY	DSN.BY	CHK.BY	APP.BY
SEWER REHAB.DWG	2130392	AS NOTED	DCM	DCM	WCS	CBW

G-1

FILE NO.

R:\Torrington CT\Wastewater Services\Task Order 1 – Sewer Rehab\Rehab CAD\SEWER REHAB.dwg

LEGEND

DESCRIPTION	SYMBOL
SANITARY SEWER	
SANITARY SEWER MANHOLE	0-00
PROPERTY LINE	
LIMITS OF SUBBASIN	
CIPP LINING	
MANHOLE REHABILITATION	

HEAVY CLEANING

SUBBASIN	STREET/ LOCATION	FROM MH	TO MH	PIPE DIA. (IN)	PIPE MAT.	APPROX. LENGTH (FT)	APPROXIMATE STATION FROM	APPROXIMATE STATION TO
1	CHESTNUT HILL ROAD	33-35	33-34	8	VC	64	0+00	0+64
1	CHESTNUT HILL ROAD	33-40	33-39	8	VC	411	0+00	4+11

TOTAL: 475 LF

CUT PROTRUDING SERVICE

SUBBASIN	STREET/ LOCATION	FROM MH	TO MH	PIPE DIA. (IN)	PIPE MAT.	APPROX. LENGTH (FT)	APPROXIMATE STATION FROM	APPROXIMATE STATION TO	PROTRUDING SERVICE APPROXIMATE STA
1	CHESTNUT HILL ROAD	33-37	33-36	8	VC	175	0+00	1+75	1+24 (CI)
1	CHESTNUT HILL ROAD	33-38	33-37	8	VC	311	0+00	3+11	1+57 (CI), 2+41 (CI)
1	CHESTNUT HILL ROAD	33-40	33-39	8	VC	411	0+00	4+11	1+36 (CI)
1	CHESTNUT HILL ROAD	33-41	33-40A	8	VC	350	0+00	3+50	0+90 (CI), 1+04 (CI), 3+05 (CI)
1	LOUIS CIRCLE	34-7	34-6	8	VC	119	0+00	1+19	0+14
1	TORRINGFORD STREET	34-95	34-64	8	VC	321	0+00	3+21	1+46

TOTAL: 9 EA

CLEAN AND TEST JOINTS

SUBBASIN	STREET/ LOCATION	FROM MH	TO MH	PIPE DIA. (IN)	PIPE MAT.	APPROX. LENGTH (FT)	APPROXIMATE STATION FROM	APPROXIMATE STATION TO
1	TORRINGFORD STREET ROW	34-115	33-30	10	PVC	292	0+00	2+92

TOTAL: 292 LF

CIPP LINING

SUBBASIN	STREET/LOCATION	FROM MH	TO MH	PIPE DIA. (IN)	MAT.	APPROX. LENGTH (FT)	APPROX. STATION FROM	APPROX. STATION TO	REINSTATE SERVICE APPROX. STA
1	TORRINGFORD STREET ROW	33-26	33-25	12	VC	230	0+00	2+30	1+26 (IF UNCAPPED)
1	TORRINGFORD STREET ROW	33-27	33-26	12	VC	139	0+00	1+39	NONE
1	TORRINGFORD STREET ROW	33-28	33-27	12	VC	236	0+00	2+36	NONE
1	TORRINGFORD STREET ROW	33-29	33-28	12	VC	244	0+00	2+44	RE-INSPECT BEFORE LINING
1	TORRINGFORD STREET ROW	33-30	33-29	12	VC	225	0+00	2+25	NONE
1	TORRINGFORD STREET ROW	33-31	33-30	12	VC	294	0+00	2+94	NONE
1	TORRINGFORD STREET ROW	33-31A	33-31	12	VC	230	0+00	2+30	NONE
1	TORRINGFORD STREET	33-31A	33-33	12	VC	273	0+00	2+73	RE-INSPECT BEFORE LINING
1	TORRINGFORD STREET	33-33	33-34	12	VC	275	0+00	2+75	RE-INSPECT BEFORE LINING
1	CHESTNUT HILL ROAD	33-35	33-34	8	VC	64	0+00	0+64	NONE
1	CHESTNUT HILL ROAD	33-36	33-35	8	VC	313	0+00	3+13	RE-INSPECT BEFORE LINING
1	CHESTNUT HILL ROAD	33-37	33-36	8	VC	175	0+00	1+75	1+24, 1+58
1	CHESTNUT HILL ROAD	33-38	33-37	8	VC	311	0+00	3+11	0+07, 0+19, 1+57, 2+41
1	CHESTNUT HILL ROAD	33-39	33-38	8	VC	320	0+00	3+20	1+45, 1+47
1	CHESTNUT HILL ROAD	33-40	33-39	8	VC	411	0+00	4+11	1+07, 1+36, 2+66, 3+48
1	CHESTNUT HILL ROAD	33-40A	33-40	8	VC	47	0+00	0+47	NONE
1	CHESTNUT HILL ROAD	33-41	33-40A	8	VC	350	0+00	3+50	0+90, 1+04, 3+05
1	CHESTNUT HILL ROAD	33-42	33-41	8	VC	262	0+00	2+62	1+52, 1+54
1	CHESTNUT HILL ROAD	33-43	33-42	8	VC	404	0+00	4+04	0+09, 0+11, 1+89, 1+95, 3+23, 3+60
1	ALBRECHT ROAD	34-1	34-1A	8	VC	261	0+00	2+61	0+38, 1+75
1	ALBRECHT ROAD	34-1A	34-4	8	VC	268	0+00	2+68	0+17, 0+29, 1+27, 1+69, 1+72, 2+54
1	ALBRECHT ROAD	34-4	34-5	8	VC	231	0+00	2+31	1+30, 2+18
1	ALBRECHT ROAD	34-5	34-9	8	VC	282	0+00	2+82	0+34, 1+17
1	ALBRECHT ROAD	34-9	34-26	8	VC	264	0+00	2+64	RE-INSPECT BEFORE LINING
1	ALBRECHT ROAD	34-26	34-27	8	VC	313	0+00	3+13	RE-INSPECT BEFORE LINING
1	ALBRECHT ROAD	34-27	34-28	8	VC	259	0+00	2+59	RE-INSPECT BEFORE LINING
1	ALBRECHT ROAD	34-28	34-29	8	VC	248	0+00	2+48	0+28, 0+90, 1+42, 1+68, 2+35
1	ALBRECHT ROAD	34-64	34-29	8	VC	199	0+00	1+99	RE-INSPECT BEFORE LINING
1	LOUIS CIRCLE	34-7	34-6	8	VC	119	0+00	1+19	0+10, 0+14, 0+99, 1+10
1	TORRINGFORD STREET	34-95	34-64	8	VC	321	0+00	3+21	0+47, 1+14, 1+46, 2+98
1	TORRINGFORD STREET	34-96	34-95	8	VC	316	0+00	3+16	0+12, 1+10, 1+82, 3+08

TOTAL: 5,738 LF

STRUCTURAL SHORT LINER

SUBBASIN	STREET/ LOCATION	FROM MH	TO MH	PIPE DIA. (IN)	PIPE MAT.	APPROX. LENGTH (FT)	APPROXIMATE STATION FROM	APPROXIMATE STATION TO	SHORT LINER LIMITS FROM	SHORT LINER LIMITS TO
1	CHESTNUT HILL ROAD	33-37	33-36	8	VC	175	0+00	1+75	1+11	1+15
1	ALBRECHT ROAD	34-1	34-1A	8	VC	261	0+00	2+61	1+01	1+07

TOTAL: 10 LF

NOTE:
SEE DRAWING C-2 FOR PROPOSED MANHOLE REHABILITATIONS.

PLAN
SCALE: 1"=200'
0 200' 400' 600'

R:\Torrington CT\Wastewater Services\Task Order 1 - Sewer Rehab\Rehab CAD\SEWER REHAB.dwg

Weston&Sampson®
273 Dividend Road, Rocky Hill, CT 06067
(860) 513-1473 (800) SAMPSON
www.westonandsampson.com

No.	Date	Dr.By	Ck.By	App.By	Description
					APPROVED

REGISTERED PROFESSIONAL ENGINEER
May 9, 2016
DATE

CITY OF TORRINGTON, CONNECTICUT
DEPARTMENT OF PUBLIC WORKS - WATER POLLUTION CONTROL AUTHORITY
EAST TORRINGTON SEWER REHABILITATION PROJECT

SUBBASIN 1 REHABILITATION LOCATION PLAN AND TABLES

FILE NAME	JOB NO.	SCALE	DR.BY	DSN.BY	CHK.BY	APP.BY
SEWER REHAB.DWG	2130392	1"=200'	DCM	DCM	WCS	CBM

FILE NO. C-1

LEGEND	
DESCRIPTION	SYMBOL
SANITARY SEWER	
SANITARY SEWER MANHOLE	0-00
PROPERTY LINE	
LIMITS OF SUBBASIN	
CIPP LINING	
MANHOLE REHABILITATION	

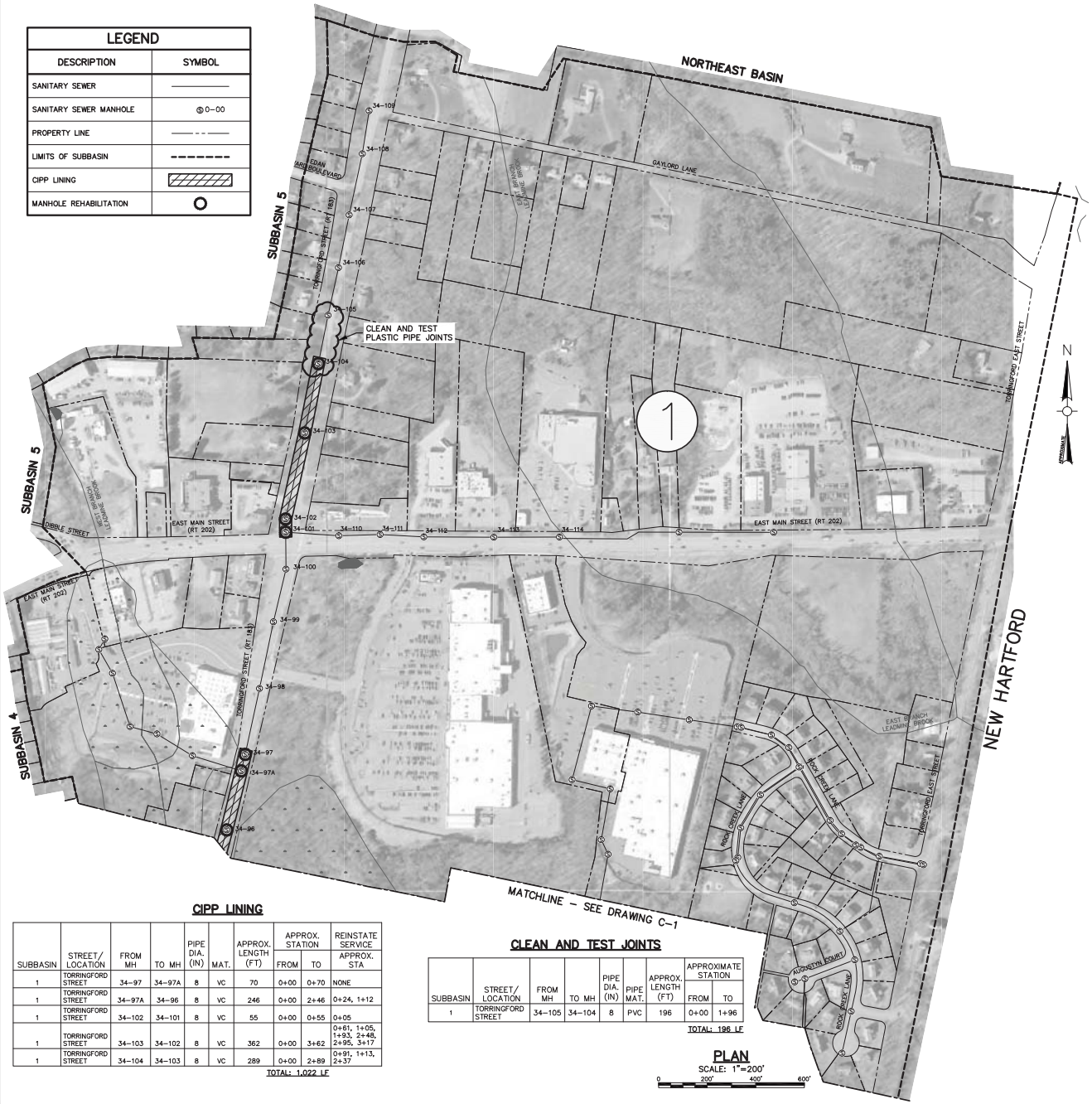

CIPP LINING

SUBBASIN	STREET/ LOCATION	FROM MH	TO MH	PIPE DIA. (IN)	MAT.	APPROX. LENGTH (FT)	APPROX. STATION FROM	APPROX. STATION TO	REINSTATE SERVICE APPROX. STA
1	TORRINGFORD STREET	34-97	34-97A	8	VC	70	0+00	0+70	NONE
1	TORRINGFORD STREET	34-97A	34-96	8	VC	246	0+00	2+46	0+24, 1+12
1	TORRINGFORD STREET	34-102	34-101	8	VC	55	0+00	0+55	0+05
1	TORRINGFORD STREET	34-103	34-102	8	VC	362	0+00	3+62	0+61, 1+05, 1+93, 2+48, 2+95, 3+17
1	TORRINGFORD STREET	34-104	34-103	8	VC	289	0+00	2+89	0+91, 1+13, 2+37

TOTAL: 1,022 LF

CLEAN AND TEST JOINTS

SUBBASIN	STREET/ LOCATION	FROM MH	TO MH	PIPE DIA. (IN)	PIPE MAT.	APPROX. LENGTH (FT)	APPROXIMATE STATION FROM	APPROXIMATE STATION TO
1	TORRINGFORD STREET	34-105	34-104	8	PVC	196	0+00	1+96

TOTAL: 196 LF

PLAN

SCALE: 1"=200'

0 200' 400' 600'

SEAL PIPE CONNECTION

SUBBASIN	STREET/ LOCATION	MH	MH DEPTH (VF)
1	CHESTNUT HILL ROAD	33-40A	7.8
1	CHESTNUT HILL ROAD	33-41	7.7
1	CHESTNUT HILL ROAD	33-42	10.7
1	CHESTNUT HILL ROAD	33-43	10.0
1	TORRINGFORD STREET	34-95	7.7
1	TORRINGFORD STREET	34-96	9.0
1	TORRINGFORD STREET	34-97	8.6
1	TORRINGFORD STREET	34-101	6.8

TOTAL: 8 MH

REBUILD BENCH/INVERT

SUBBASIN	STREET/ LOCATION	MH	MH DEPTH (VF)
1	CHESTNUT HILL ROAD	33-34	8.6
1	CHESTNUT HILL ROAD	33-35	5.2
1	ALBRECHT ROAD	34-29	7.8

TOTAL: 3 EA

CEMENTITIOUS MH LINER

SUBBASIN	STREET/ LOCATION	MH	MH DEPTH (VF)
1	TORRINGFORD STREET ROW	33-25	10.0
1	TORRINGFORD STREET ROW	33-26	10.0
1	TORRINGFORD STREET ROW	33-27	10.0
1	TORRINGFORD STREET ROW	33-28	10.0
1	TORRINGFORD STREET ROW	33-29	10.0
1	TORRINGFORD STREET ROW	33-30	10.0
1	TORRINGFORD STREET ROW	33-31	9.7
1	TORRINGFORD STREET ROW	33-31A	9.4
1	TORRINGFORD STREET	33-33	8.5
1	CHESTNUT HILL ROAD	33-34	8.6
1	CHESTNUT HILL ROAD	33-35	5.2
1	CHESTNUT HILL ROAD	33-36	8.4
1	CHESTNUT HILL ROAD	33-37	8.8
1	CHESTNUT HILL ROAD	33-38	8.6
1	CHESTNUT HILL ROAD	33-39	7.4
1	CHESTNUT HILL ROAD	33-40	8.3
1	CHESTNUT HILL ROAD	33-40A	7.8
1	CHESTNUT HILL ROAD	33-41	7.7
1	CHESTNUT HILL ROAD	33-42	10.7
1	CHESTNUT HILL ROAD	33-43	10.0
1	ALBRECHT ROAD	34-1A	7.4
1	ALBRECHT ROAD	34-1	10.3
1	ALBRECHT ROAD	34-4	6.8
1	ALBRECHT ROAD	34-5	7.3
1	LOUIS CIRCLE	34-6	7.1
1	ALBRECHT ROAD	34-9	9.5
1	ALBRECHT ROAD	34-27	8.9
1	ALBRECHT ROAD	34-28	7.3
1	ALBRECHT ROAD	34-29	7.8
1	TORRINGFORD STREET ROW	34-56	6.8
1	TORRINGFORD STREET ROW	34-57	6.8
1	TORRINGFORD STREET	34-64	7.6
1	DOROTHY DRIVE ROW	34-77	5.3
1	DOROTHY DRIVE ROW	34-78	9.6
1	DOROTHY DRIVE ROW	34-79	18.0
1	DOROTHY DRIVE	34-80	6.0
1	TORRINGFORD STREET	34-95	7.7
1	TORRINGFORD STREET	34-96	9.0
1	TORRINGFORD STREET	34-97	8.6
1	TORRINGFORD STREET	34-97A	10.0
1	TORRINGFORD STREET	34-101	6.8
1	TORRINGFORD STREET	34-102	7.5
1	TORRINGFORD STREET	34-103	9.0
1	TORRINGFORD STREET	34-104	9.6

TOTAL: 379.8 VF

Weston&Sampson®
273 Dividend Road, Rocky Hill, CT 06067
(860) 513-1473 (800) SAMPSON
www.westonandsampson.com

No.	Date	Dr.By	Ck.By	App.By	Description
A		P	R	O	V E D

REGISTERED PROFESSIONAL ENGINEER

May 9, 2016
DATE

CITY OF TORRINGTON, CONNECTICUT
DEPARTMENT OF PUBLIC WORKS - WATER POLLUTION CONTROL AUTHORITY
EAST TORRINGTON SEWER REHABILITATION PROJECT

REHABILITATION LOCATION PLAN AND TABLES

SUBBASIN 1

FILE NAME	JOB NO.	SCALE	DR.BY	DSN.BY	CHK.BY	APP.BY
SEWER REHAB.DWG	2130392	1"=200'	DCM	DCM	WGS	CBM

C-2

FILE NO.

SHEET 4 OF 18

R:\Torrington CT\Wastewater Services\Task Order 1 - Sewer Rehab\Rehab CAD\SEWER REHAB.dwg

CLEAN AND TEST JOINTS

SUBBASIN	STREET/ LOCATION	FROM MH	TO MH	PIPE DIA. (IN)	PIPE MAT.	APPROX. LENGTH (FT)	APPROXIMATE STATION	
							FROM	TO
2	VILLAGE DRIVE	33-196	33-128	8	PVC	280	0+00	2+80
2	VILLAGE DRIVE	33-197	33-196	8	PVC	120	0+00	1+20
2	VILLAGE DRIVE	33-198	33-197	8	PVC	203	0+00	2+03

TOTAL: 603 LF

HEAVY CLEANING

SUBBASIN	STREET/ LOCATION	FROM MH	TO MH	PIPE DIA. (IN)	PIPE MAT.	APPROX. LENGTH (FT)	APPROXIMATE STATION	
							FROM	TO
2	COUNTY ROAD	33-55	33-56	10	VC	204	0+00	2+04
2	COUNTY ROAD	33-57	33-58	10	VC	192	0+00	1+92

TOTAL: 396 LF

LEGEND

DESCRIPTION	SYMBOL
SANITARY SEWER	
SANITARY SEWER MANHOLE	0-00
PROPERTY LINE	
LIMITS OF SUBBASIN	
CIPP LINING	
MANHOLE REHABILITATION	

CIPP LINING

SUBBASIN	STREET/ LOCATION	FROM MH	TO MH	PIPE DIA. (IN)	MAT.	APPROX. LENGTH (FT)	APPROX. STATION		REINSTATE SERVICE
							FROM	TO	APPROX. STA
2	COUNTY ROAD	33-55	33-56	10	VC	204	0+00	2+04	0+68, 0+95
2	COUNTY ROAD	33-57	33-58	10	VC	192	0+00	1+92	0+10
2	COUNTY ROAD	33-58	33-59	10	VC	299	0+00	2+99	RE-INSPECT BEFORE LINING
2	COUNTY ROAD	33-59	33-59A	8	VC	89	0+00	0+89	RE-INSPECT BEFORE LINING
2	COUNTY ROAD	33-59A	33-60	8	VC	167	0+00	1+67	RE-INSPECT BEFORE LINING
2	COUNTY ROAD	33-60	33-61	8	VC	258	0+00	2+58	RE-INSPECT BEFORE LINING
2	COUNTY ROAD	33-61	33-62	8	VC	211	0+00	2+11	RE-INSPECT BEFORE LINING
2	DUTTON HILL ROAD	33-80	33-81	8	VC	290	0+00	2+90	0+86, 2+26
2	DUTTON HILL ROAD	33-81	33-82	8	VC	263	0+00	2+63	0+59, 2+20
2	LORETTA ROAD	33-91	33-92	8	VC	308	0+00	3+08	0+20, 0+62, 1+40, 1+52, 2+40, 2+57
2	LORETTA ROAD	33-92	33-93	8	VC	269	0+00	2+69	0+38, 1+00, 1+13, 2+11, 2+53, 2+61
2	LORETTA ROAD	33-93	33-82	8	VC	202	0+00	2+02	0+93

TOTAL: 2,752 LF

CEMENTITIOUS MH LINER

SUBBASIN	STREET/LOCATION	MH	MH DEPTH (VF)
2	COUNTY ROAD	33-55	7.1
2	COUNTY ROAD	33-56	11.0
2	COUNTY ROAD	33-57	10.7
2	COUNTY ROAD	33-58	10.0
2	COUNTY ROAD	33-59	7.8
2	COUNTY ROAD	33-59A	10.0
2	COUNTY ROAD	33-60	8.0
2	COUNTY ROAD	33-61	10.0
2	COUNTY ROAD	33-62	10.0
2	DUTTON HILL ROAD	33-80	8.4
2	DUTTON HILL ROAD	33-81	8.0
2	DUTTON HILL ROAD	33-82	7.8
2	LORETTA DRIVE	33-91	9.1
2	LORETTA DRIVE	33-92	10.8
2	LORETTA DRIVE	33-93	11.0
2	OXBOW DRIVE	33-128	8.2
2	VILLAGE LANE	33-196	7.7
2	VILLAGE LANE	33-197	7.4
2	VILLAGE LANE	33-198	7.2

TOTAL: 170.2 VF

STRUCTURAL SHORT LINER

SUBBASIN	STREET/ LOCATION	FROM MH	TO MH	PIPE DIA. (IN)	PIPE MAT.	APPROX. LENGTH (FT)	APPROXIMATE STATION		SHORT LINER LIMITS	
							FROM	TO	FROM	TO
2	LORETTA ROAD	33-91	33-92	8	VC	308	0+00	3+08	2+97	3+01

TOTAL: 4 LF

PLAN

SCALE: 1"=200'

0 200' 400' 600'

Weston&Sampson®
273 Dividend Road, Rocky Hill, CT 06067
(860) 513-1473 (800) SAMPSON
www.westonandsampson.com

No.	Date	Dr.By	Ck.By	App.By	Description
A	P	P	R	O	V E D

REGISTERED PROFESSIONAL ENGINEER

May 9, 2016
DATE

CITY OF TORRINGTON, CONNECTICUT
DEPARTMENT OF PUBLIC WORKS – WATER POLLUTION CONTROL AUTHORITY
EAST TORRINGTON SEWER REHABILITATION PROJECT

SUBBASIN 2 REHABILITATION LOCATION PLAN AND TABLES

FILE NAME	JOB NO.	SCALE	DR.BY	DSN.BY	CHK.BY	APP.BY
SEWER REHAB.DWG	2130392	1"=200'	DCM	DCM	WGS	CBM

C-3

FILE NO.

R:\Torrington CT\Wastewater Services\Task Order 1 – Sewer Rehab\Rehab CAD\SEWER REHAB.dwg

CIPP LINING

SUBBASIN	STREET/LOCATION	FROM MH	TO MH	PIPE DIA. (IN)	MAT.	APPROX. LENGTH (FT)	APPROX. STATION		REINSTATE SERVICE
							FROM	TO	APPROX. STA
3	NEW HARWINTON ROAD	33-163	33-163A	8	VC	110	0+00	1+10	RE-INSPECT BEFORE LINING
3	NEW HARWINTON ROAD	33-163A	33-164	8	VC	96	0+00	0+96	RE-INSPECT BEFORE LINING
3	NEW HARWINTON ROAD	33-164	33-164A	8	VC	235	0+00	2+35	RE-INSPECT BEFORE LINING
3	NEW HARWINTON ROAD	33-164A	33-165	8	VC	143	0+00	1+43	RE-INSPECT BEFORE LINING
3	NEW HARWINTON ROAD	33-165	33-166	8	VC	236	0+00	2+36	RE-INSPECT BEFORE LINING

TOTAL: 820 LF

CEMENTITIOUS MH LINER

SUBBASIN	STREET/LOCATION	MH	MH DEPTH (VF)
3	NEW HARWINTON ROAD	33-163	10.0
3	NEW HARWINTON ROAD	33-163A	10.0
3	NEW HARWINTON ROAD	33-164	10.0
3	NEW HARWINTON ROAD	33-164A	10.0
3	NEW HARWINTON ROAD	33-165	10.0
3	NEW HARWINTON ROAD	33-166	7.0

TOTAL: 57.0 VF

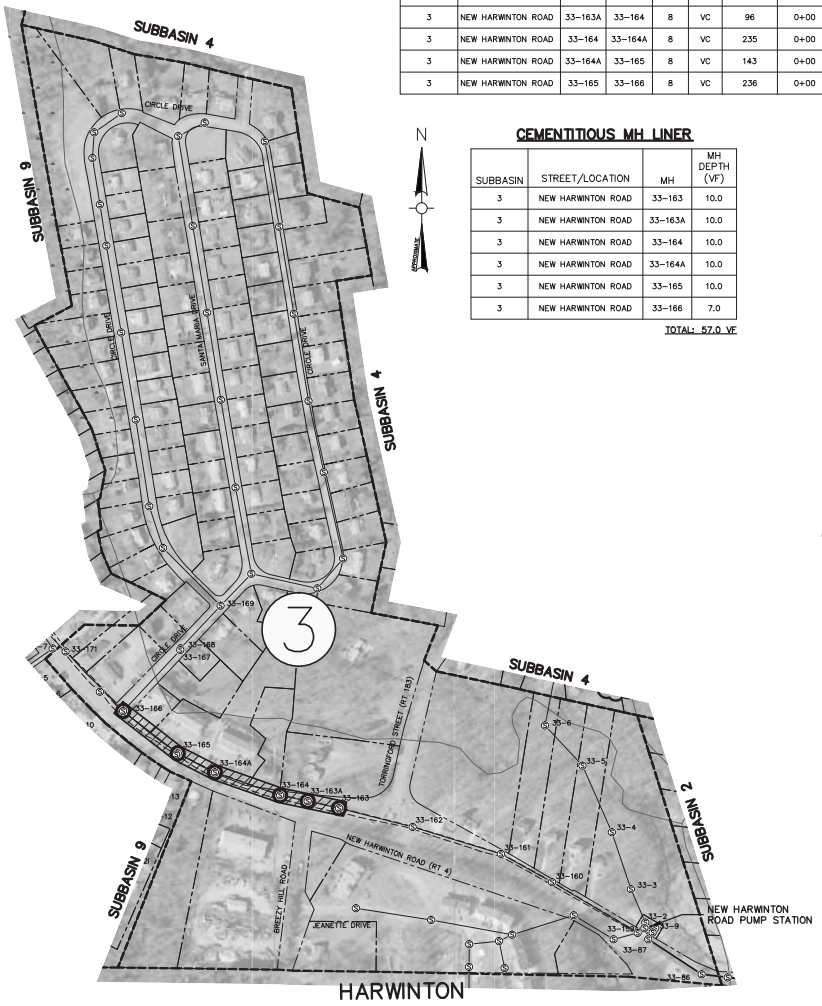

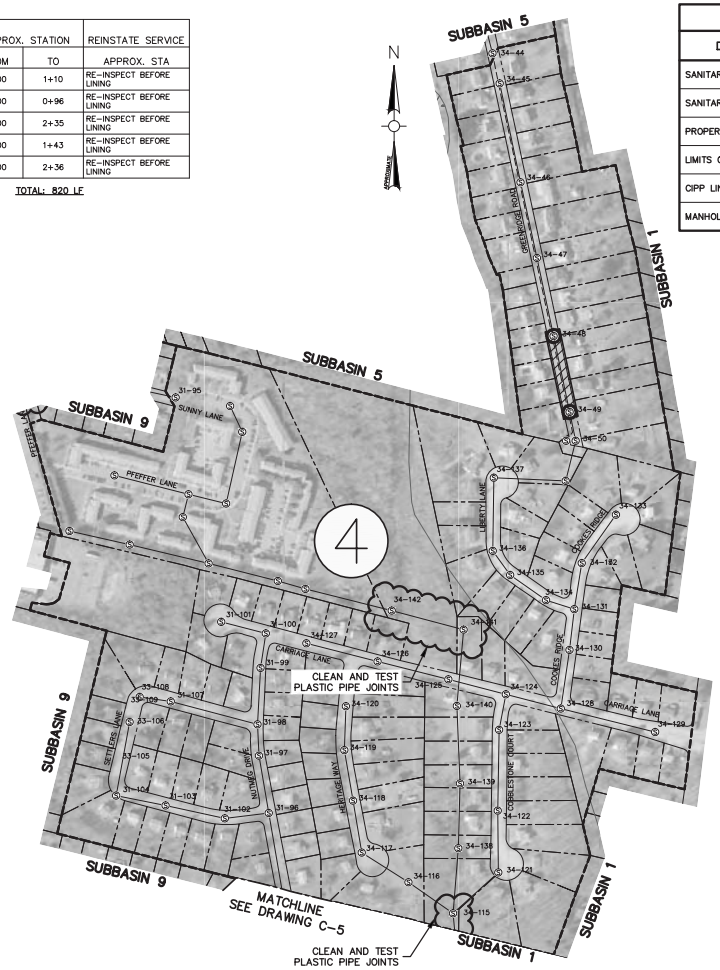

LEGEND

DESCRIPTION	SYMBOL
SANITARY SEWER	
SANITARY SEWER MANHOLE	0-00
PROPERTY LINE	
LIMITS OF SUBBASIN	
CIPP LINING	
MANHOLE REHABILITATION	

CIPP LINING

SUBBASIN	STREET/LOCATION	FROM MH	TO MH	PIPE DIA. (IN)	MAT.	APPROX. LENGTH (FT)	APPROX. STATION		REINSTATE SERVICE
							FROM	TO	APPROX. STA
4	GREENRIDGE ROAD	34-49	34-48	8	VC	270	0+00	2+70	0+58, 0+70, 1+42, 1+55, 1+87, 2+09

TOTAL: 270 LF

CEMENTITIOUS MH LINER

SUBBASIN	STREET/LOCATION	MH	MH DEPTH (VF)
4	GREENRIDGE ROAD	34-48	9.9
4	GREENRIDGE ROAD	34-49	10.0

TOTAL: 19.9 VF

CLEAN AND TEST JOINTS

SUBBASIN	STREET/LOCATION	FROM MH	TO MH	PIPE DIA. (IN)	MAT.	APPROX. LENGTH (FT)	APPROX. STATION	
							FROM	TO
4	CARRIAGE LANE ROW	34-142	34-141	8	PVC	260	0+00	2+60

TOTAL: 260 LF

PLAN

SCALE: 1"=200'

0 200' 400' 600'

Weston&Sampson®
273 Dividend Road, Rocky Hill, CT 06067
(860) 513-1473 (800) SAMPSON
www.westonandsampson.com

No.	Date	Dr.By	Ck.By	App.By	Description
A		P	R	O	V E D

REGISTERED PROFESSIONAL ENGINEER

DATE May 9, 2016

CITY OF TORRINGTON, CONNECTICUT
DEPARTMENT OF PUBLIC WORKS – WATER POLLUTION CONTROL AUTHORITY
EAST TORRINGTON SEWER REHABILITATION PROJECT

SUBBASINS 3 AND 4 REHABILITATION LOCATION PLAN AND TABLES

FILE NAME	JOB NO.	SCALE	DR.BY	DSN.BY	CHK.BY	APP.BY
SEWER REHAB.DWG	2130392	1"=200'	DCM	DCM	WGS	CBM

FILE NO.

C-4

SHEET 6 OF 18

R:\Torrington CT\Wastewater Services\Task Order 1 – Sewer Rehab\Rehab CAD\SEWER REHAB.dwg

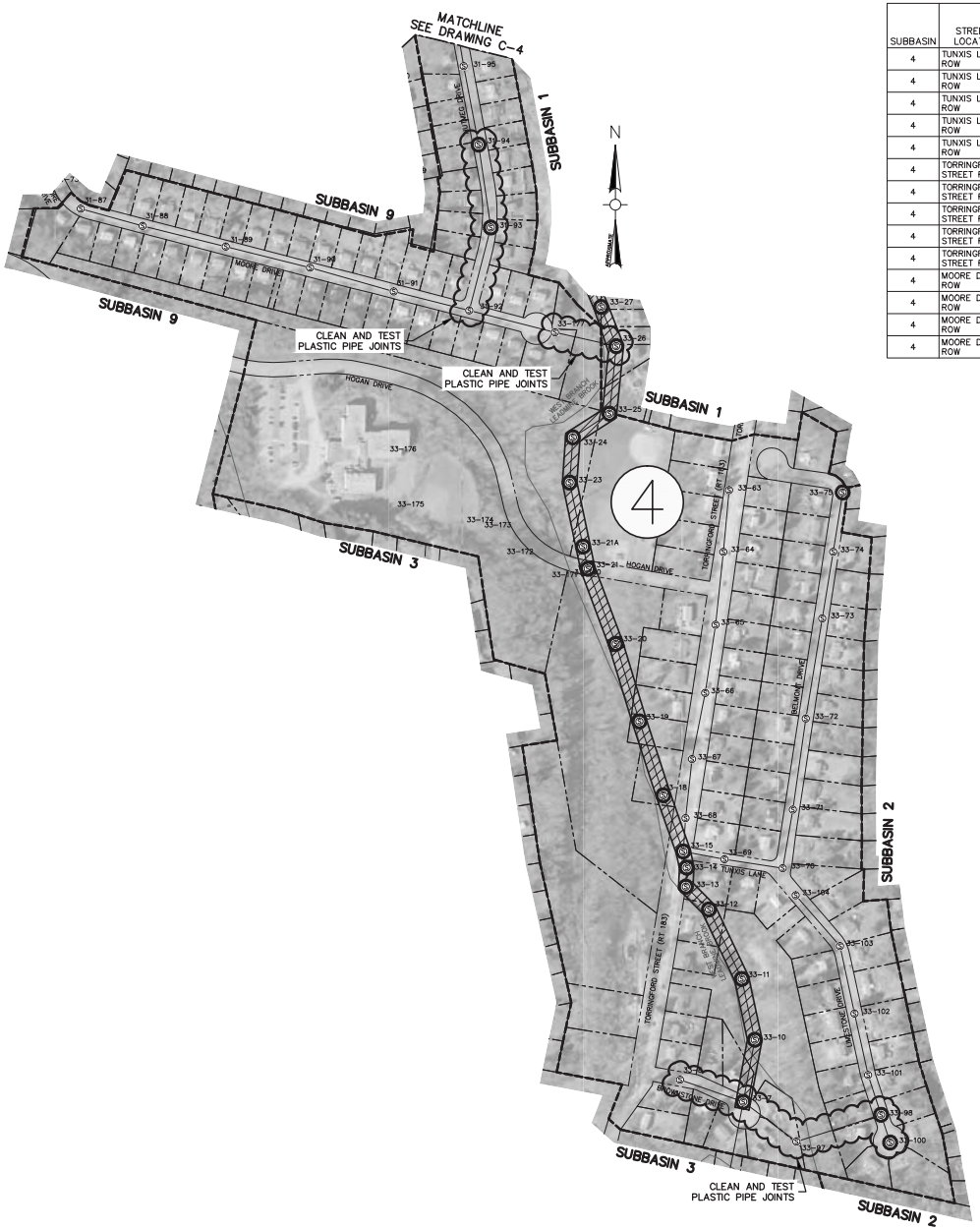

CIPP LINING

SUBBASIN	STREET/ LOCATION	FROM MH	TO MH	PIPE DIA. (IN)	PIPE MAT.	APPROX. LENGTH (FT)	APPROXIMATE STATION		REINSTATE SERVICE
							FROM	TO	APPROXIMATE STA
4	TUNXIS LANE ROW	33–10	33–7	12	VC	225	0+00	2+25	NONE
4	TUNXIS LANE ROW	33–11	33–10	12	VC	233	0+00	2+33	1+00 (IF UNCAPPED)
4	TUNXIS LANE ROW	33–12	33–11	12	VC	268	0+00	2+68	0+78, 1+82
4	TUNXIS LANE ROW	33–13	33–12	12	VC	112	0+00	1+12	NONE
4	TUNXIS LANE ROW	33–14	33–13	12	VC	74	0+00	0+74	NONE
4	TORRINGFORD STREET ROW	33–15	33–14	12	VC	48	0+00	0+48	NONE
4	TORRINGFORD STREET ROW	33–18	33–15	12	VC	226	0+00	2+26	NONE
4	TORRINGFORD STREET ROW	33–19	33–18	12	VC	278	0+00	2+78	2+50
4	TORRINGFORD STREET ROW	33–20	33–19	12	VC	283	0+00	2+83	NONE
4	TORRINGFORD STREET ROW	33–21	33–20	12	VC	278	0+00	2+78	RE–INSPECT BEFORE LINING
4	MOORE DRIVE ROW	33–21A	33–21	12	VC	58	0+00	0+58	NONE
4	MOORE DRIVE ROW	33–25	33–24	12	VC	148	0+00	1+48	NONE
4	MOORE DRIVE ROW	33–24	33–23	12	VC	141	0+00	1+41	NONE
4	MOORE DRIVE ROW	33–23	33–21A	12	VC	296	0+00	2+96	NONE

TOTAL: 2,668 LF

CLEAN AND TEST JOINTS

SUBBASIN	STREET/ LOCATION	FROM MH	TO MH	PIPE DIA. (IN)	PIPE MAT.	APPROX. LENGTH (FT)	APPROXIMATE STATION	
							FROM	TO
4	NUTMEG DRIVE	31–93	31–92	8	PVC	300	0+00	3+00
4	NUTMEG DRIVE	31–94	31–93	8	PVC	290	0+00	2+90
4	BROWNSTONE DRIVE	33–7	33–8	8	TRUSS	232	0+00	2+32
4	LIMESTONE DRIVE ROW	33–7	33–97	8	PVC	238	0+00	2+38
4	LIMESTONE DRIVE ROW	33–98	33–97	8	PVC	322	0+00	3+22
4	LIMESTONE DRIVE	33–100	33–98	8	PVC	100	0+00	1+00
4	MOORE DRIVE ROW	33–177	33–26	8	PVC	219	0+00	2+19

TOTAL: 1,701 LF

LEGEND

DESCRIPTION	SYMBOL
SANITARY SEWER	————
SANITARY SEWER MANHOLE	Ⓢ 0–00
PROPERTY LINE	——— - - ———
LIMITS OF SUBBASIN	- - - - - - -
CIPP LINING	▨
MANHOLE REHABILITATION	○

CEMENTITIOUS MANHOLE LINING

SUBBASIN	STREET/LOCATION	MH	MH DEPTH (VF)
4	NUTMEG DRIVE	31–94	9.4
4	BROWNSTONE DRIVE	33–7	12.1
4	TUNXIS LANE ROW	33–10	6.5
4	TUNXIS LANE ROW	33–11	9.1
4	TUNXIS LANE ROW	33–12	8.9
4	TUNXIS LANE ROW	33–13	10.0
4	TORRINGFORD STREET	33–14	7.6
4	TORRINGFORD STREET	33–15	6.9
4	TORRINGFORD STREET ROW	33–18	5.4
4	TORRINGFORD STREET ROW	33–19	10.0
4	TORRINGFORD STREET ROW	33–20	5.9
4	TORRINGFORD STREET ROW	33–21	18.9
4	TORRINGFORD STREET ROW	33–21A	10.0
4	TORRINGFORD STREET ROW	33–23	10.0
4	TORRINGFORD STREET ROW	33–24	10.0
4	LIMESTONE DRIVE	33–98	10.4
4	LIMESTONE DRIVE	33–100	9.0

TOTAL: 160.1 VF

SEAL PIPE CONNECTION

SUBBASIN	STREET/LOCATION	MH	MH DEPTH (VF)
4	NUTMEG DRIVE	31–93	18.3
4	TORRINGFORD STREET ROW	33–21	18.9
4	LIMESTONE DRIVE	33–98	10.4
4	LIMESTONE DRIVE	33–100	9.0

TOTAL: 4 MH

PLAN

SCALE: 1"=200'

0 200' 400' 600'

Weston&Sampson®
273 Dividend Road, Rocky Hill, CT 06067
(860) 513-1473 (800) SAMPSON
www.westonandsampson.com

No.	Date	Dr.By	Ck.By	App.By	Description
A		P	R	O	V E D

REGISTERED PROFESSIONAL ENGINEER

May 9, 2016
DATE

CITY OF TORRINGTON, CONNECTICUT
DEPARTMENT OF PUBLIC WORKS – WATER POLLUTION CONTROL AUTHORITY
EAST TORRINGTON SEWER REHABILITATION PRJECT

SUBBASIN 4
REHABILITATION LOCATION PLAN AND TABLES

FILE NAME	JOB NO.	SCALE	DR.BY	DSN.BY	CHK.BY	APP.BY
SEWER REHAB.DWG	2130392	1"=200'	DCM	DCM	WCS	CBM

C-5

FILE NO.

R:\Torrington CT\Wastewater Services\Task Order 1 – Sewer Rehab\Rehab CAD\SEWER REHAB.dwg

LEGEND

DESCRIPTION	SYMBOL
SANITARY SEWER	————
SANITARY SEWER MANHOLE	Ⓢ 0-00
PROPERTY LINE	—— - - ——
LIMITS OF SUBBASIN	- - - - - - -
CIPP LINING	▨
MANHOLE REHABILITATION	○

CEMENTITIOUS MANHOLE LINING

SUBBASIN	STREET/LOCATION	MH	MH DEPTH (VF)
5	TORRINGFORD WEST STREET	30-12	7.8
5	TORRINGFORD WEST STREET	30-15	4.0
5	TORRINGFORD WEST STREET	30-16	4.0
5	WINDTREE LANE ROW	30-44	11.5
5	WINDTREE LANE	30-48	7.8
5	WINDTREE LANE	30-49	6.0
5	WINDTREE LANE	30-61	10.0
5	TORRINGFORD WEST STREET ROW	30-71	8.1
5	ALLISON DRIVE	30-118	22.5
5	ALLISON DRIVE	30-128	22.0

TOTAL: 103.7 VF

SEAL PIPE CONNECTION

SUBBASIN	STREET/ LOCATION	MH	MH DEPTH (VF)
5	ALLISON DRIVE	30-118	22.5

TOTAL: 1 MH

REBUILD BENCH/INVERT

SUBBASIN	STREET/ LOCATION	MH	MH DEPTH (VF)
5	TORRINGFORD WEST STREET	30-12	7.8

TOTAL: 1 EA

STRUCTURAL SHORT LINER

SUBBASIN	STREET/ LOCATION	FROM MH	TO MH	PIPE DIA. (IN)	PIPE MAT.	APPROX. LENGTH (FT)	APPROXIMATE STATION		SHORT LINER LIMITS	
							FROM	TO	FROM	TO
5	TORRINGFORD WEST ROW	30-71	30-72	10	PLASTIC MORTAR	346	0+00	3+46	2+73	2+78

TOTAL: 5 LF

CLEAN AND TEST JOINTS

SUBBASIN	STREET/ LOCATION	FROM MH	TO MH	PIPE DIA. (IN)	PIPE MAT.	APPROX. LENGTH (FT)	APPROXIMATE STATION	
							FROM	TO
5	TORRINGFORD WEST STREET ROW	30-71	30-72	10	PLASTIC MORTAR	346	0+00	3+46
5	ALLISON DRIVE	30-128	30-118	8	PVC	166	0+00	1+66
5	WINDTREE LANE	30-61	30-60	8	ABS	177	0+00	1+77
5	WINDTREE LANE ROW	30-45	30-44	10	PVC	40	0+00	0+40

TOTAL: 729 LF

CIPP LINING

SUBBASIN	STREET/ LOCATION	FROM MH	TO MH	PIPE DIA. (IN)	PIPE MAT.	APPROX. LENGTH (FT)	APPROXIMATE STATION		REINSTATE SERVICE
							FROM	TO	APPROXIMATE STA
5	WINDTREE LANE	30-48	30-47	8	VC	214	0+00	2+14	1+84
5	WINDTREE LANE	30-49	30-48	8	VC	173	0+00	1+73	1+03, 1+35
5	TORRINGFORD WEST STREET	30-15	30-16	8	VC	292	0+00	2+92	1+57

TOTAL: 679 LF

PLAN

SCALE: 1"=200'

0 200' 400' 600'

R:\Torrington CT\Wastewater Services\Task Order 1 – Sewer Rehab\Rehab CAD\SEWER REHAB.dwg

Weston&Sampson®
273 Dividend Road, Rocky Hill, CT 06067
(860) 513-1473 (800) SAMPSON
www.westonandsampson.com

No.	Date	Dr.By	Ck.By	App.By	Description
A		P	P	R	O V E D

REGISTERED PROFESSIONAL ENGINEER — DATE: May 9, 2016

CITY OF TORRINGTON, CONNECTICUT
DEPARTMENT OF PUBLIC WORKS – WATER POLLUTION CONTROL AUTHORITY
EAST TORRINGTON SEWER REHABILITATION PROJECT

SUBBASIN 5 REHABILITATION LOCATION PLAN AND TABLES

FILE NAME	JOB NO.	SCALE	DR.BY	DSN.BY	CHK.BY	APP.BY
SEWER REHAB.DWG	2130392	1"=200'	DCM	DCM	WGS	CBM

C-6

FILE NO.

SHEET 8 OF 18

CEMENTITIOUS MANHOLE LINING

SUBBASIN	STREET/LOCATION	MH	MH DEPTH (VF)
5	TORRINGFORD WEST STREET	30-1B	10.0
5	TORRINGFORD WEST STREET	30-1C	8.0
5	TORRINGFORD WEST STREET	30-2	7.5
5	TORRINGFORD WEST STREET	30-3	10.0
5	TORRINGFORD WEST STREET	30-4	10.0
5	TORRINGFORD WEST STREET	30-5	10.0
5	TORRINGFORD WEST STREET	30-6	9.6
5	TORRINGFORD WEST STREET	30-7	8.8
5	TORRINGFORD WEST STREET	30-8	7.3
5	TORRINGFORD WEST STREET	30-9	10.0
5	TORRINGFORD WEST STREET	30-10	10.0
5	EAST MAIN STREET	30-18	6.3
5	EAST MAIN STREET	30-18A	10.0
5	EAST MAIN STREET	30-19	6.1
5	EAST MAIN STREET	30-20	7.5
5	DURAND STREET	30-28	7.4
5	DURAND STREET	30-29	6.6
5	DURAND STREET	30-30	5.7
5	DIBBLE STREET	30-31	10.0
5	DIBBLE STREET	30-39A	10.0
5	EAST MAIN STREET	34-34	7.8
5	EAST MAIN STREET	34-35	10.0
5	EAST MAIN STREET	34-36	7.3
5	EAST MAIN STREET	34-43	10.4

TOTAL: 206.3 VF

LEGEND

DESCRIPTION	SYMBOL
SANITARY SEWER	
SANITARY SEWER MANHOLE	0-00
PROPERTY LINE	
LIMITS OF SUBBASIN	
CIPP LINING	
MANHOLE REHABILITATION	

PLAN

SCALE: 1"=200'

0 200' 400' 600'

CIPP LINING

SUBBASIN	STREET/ LOCATION	FROM MH	TO MH	PIPE DIA. (IN)	PIPE MAT.	APPROX. LENGTH (FT)	APPROXIMATE STATION		REINSTATE SERVICE
							FROM	TO	APPROXIMATE STA
5	TORRINGFORD WEST	30-1C	30-1B	8	VC	248	0+00	2+48	RE-INSPECT BEFORE LINING
5	TORRINGFORD WEST	30-2	30-1C	8	VC	253	0+00	2+53	RE-INSPECT BEFORE LINING
5	TORRINGFORD WEST	30-3	30-2	8	VC	212	0+00	2+12	RE-INSPECT BEFORE LINING
5	TORRINGFORD WEST	30-4	30-3	8	VC	288	0+00	2+88	RE-INSPECT BEFORE LINING
5	TORRINGFORD WEST	30-5	30-4	8	VC	252	0+00	2+52	RE-INSPECT BEFORE LINING
5	TORRINGFORD WEST	30-6	30-5	8	VC	199	0+00	1+99	RE-INSPECT BEFORE LINING
5	TORRINGFORD WEST	30-7	30-6	10	VC	251	0+00	2+51	0+60, 0+66, 1+27, 1+61, 1+86
5	TORRINGFORD WEST	30-8	30-7	10	VC	243	0+00	2+43	0+92, 0+98, 1+68, 2+02
5	TORRINGFORD WEST	30-9	30-8	8	VC	249	0+00	2+49	RE-INSPECT BEFORE LINING
5	TORRINGFORD WEST	30-10	30-9	8	VC	250	0+00	2+50	RE-INSPECT BEFORE LINING
5	EAST MAIN STREET	30-18A	30-18	10	VC	253	0+00	2+53	0+79, 1+74, 2+26
5	EAST MAIN STREET	30-19	30-18A	10	VC	113	0+00	1+13	0+89
5	EAST MAIN STREET	30-19	30-20	10	VC	152	0+00	1+52	0+84
5	DURAND STREET	30-29	30-28	8	VC	248	0+00	2+48	0+05, 0+20, 0+84, 0+87, 1+83, 1+85
5	DURAND STREET	30-30	30-29	8	VC	197	0+00	1+97	0+12, 0+18, 1+20, 1+29
5	DURAND STREET	30-31	30-30	8	VC	138	0+00	1+38	1+02
5	DIBBLE STREET	30-39A	30-31	8	VC	201	0+00	2+01	0+09, 0+71, 1+36
5	EAST MAIN STREET	34-35	34-34	8	VC	264	0+00	2+64	0+51, 1+87
5	EAST MAIN STREET	34-36	34-35	8	VC	230	0+00	2+30	0+26, 1+13

TOTAL: 4,241 LF

CUT PROTRUDING SERVICE

SUBBASIN	STREET/ LOCATION	FROM MH	TO MH	PIPE DIA. (IN)	PIPE MAT.	APPROX. LENGTH (FT)	APPROXIMATE STATION		PROTRUDING SERVICE
							FROM	TO	APPROXIMATE STA
5	EAST MAIN STREET	30-18A	30-18	10	VC	253	0+00	2+53	1+74

TOTAL: 1 EA

CLEAN AND TEST JOINTS

SUBBASIN	STREET/ LOCATION	FROM MH	TO MH	PIPE DIA. (IN)	PIPE MAT.	APPROX. LENGTH (FT)	APPROXIMATE STATION	
							FROM	TO
5	DIBBLE STREET	30-41	30-42	10	PLASTIC	28	0+00	0+28
5	WINDTREE LANE ROW	30-42	30-43	10	PLASTIC	51	0+00	0+51
5	WINDTREE LANE ROW	30-44	30-43	10	PVC	456	0+00	4+56

TOTAL: 535 LF

SEAL PIPE CONNECTION

SUBBASIN	STREET/ LOCATION	MH	MH DEPTH (VF)
5	TORRINGFORD WEST STREET	30-1C	8.0
5	TORRINGFORD WEST STREET	30-4	10.0
5	TORRINGFORD WEST STREET	30-8	7.3
5	EAST MAIN STREET	34-43	10.4

TOTAL: 4 MH

Weston&Sampson®
273 Dividend Road, Rocky Hill, CT 06067
(860) 513-1473 (800) SAMPSON
www.westonandsampson.com

No.	Date	Dr.By	Ck.By	App.By	Description
A		P	P	R	O V E D

REGISTERED PROFESSIONAL ENGINEER

May 9, 2016
DATE

CITY OF TORRINGTON, CONNECTICUT
DEPARTMENT OF PUBLIC WORKS – WATER POLLUTION CONTROL AUTHORITY
EAST TORRINGTON SEWER REHABILITATION PROJECT

SUBBASIN 5
REHABILITATION LOCATION PLAN AND TABLES

FILE NAME: SEWER REHAB.DWG | JOB NO. 2130392 | SCALE 1"=200' | DR.BY DCM | DSN.BY DCM | CHK.BY WGS | APP.BY CBM

C-7

FILE NO.

R:\Torrington CT\Wastewater Services\Task Order 1 – Sewer Rehab\Rehab CAD\SEWER REHAB.dwg

CIPP LINING

SUBBASIN	STREET/ LOCATION	FROM MH	TO MH	PIPE DIA. (IN)	PIPE MAT.	APPROX. LENGTH (FT)	APPROXIMATE STATION		REINSTATE SERVICE
							FROM	TO	APPROXIMATE STA
5	EAST MAIN STREET	26N-1	14-89	8	VC	125	0+00	1+25	0+22, 0+77
5	EAST MAIN STREET	26N-5	26N-2	8	VC	184	0+00	1+84	0+38, 0+40, 0+97, 1+18, 1+66
5	EAST MAIN STREET	26N-6	26N-5	8	VC	97	0+00	0+97	0+33, 0+86, 0+88
5	EAST MAIN STREET	26N-7	26N-6	8	VC	241	0+00	2+41	0+36, 0+38, 0+89, 0+91, 1+42, 1+44, 1+97, 1+99
5	EAST MAIN STREET	26N-8	26N-7	8	VC	120	0+00	1+20	0+53, 1+10
5	EAST MAIN STREET	26N-9	26N-8	8	VC	122	0+00	1+22	0+27, 0+47, 0+86, 0+88
5	ARLENE STREET ROW	26N-21	26N-21A	6	VC	240	0+00	2+40	1+46
5	EAST MAIN STREET	26S-11	26S-10	10	VC	211	0+00	2+11	0+05, 1+61
5	IRVING AVENUE	26S-50	26S-51A	8	VC	215	0+00	2+15	RE-INSPECT BEFORE LINING
5	IRVING AVENUE	26S-51A	26S-51	8	VC	52	0+00	0+52	RE-INSPECT BEFORE LINING
5	IRVING AVENUE	26S-58	26S-51	8	VC	358	0+00	3+58	1+33, 2+38, 3+07
5	IRVING AVENUE	26S-59	26S-58	8	VC	198	0+00	1+98	0+44, 1+23, 1+92
5	IRVING AVENUE	26S-59	26S-60	8	VC	186	0+00	1+86	0+34, 0+39, 0+97
5	IRVING AVENUE	26S-60	26S-61	8	VC	192	0+00	1+92	0+23, 0+81, 0+93, 0+95, 1+85
5	ADELAIDE TERRACE	26S-54	26S-53	8	VC	256	0+00	2+56	0+96, 1+61, 2+12, 2+45

TOTAL: 2,797 LF

OPEN CUT SPOT REPAIR

SUBBASIN	STREET/ LOCATION	FROM MH	TO MH	PIPE DIA. (IN)	PIPE MAT.	APPROX. LENGTH (FT)	APPROXIMATE STATION	
							FROM	TO
5	WHEELER LANE	26N-25	26N-24	8	VC	189	1+75	1+85
5	EAST MAIN STREET	26S-6	26S-5	10	VC	253	2+40	2+50
5	IRVING AVENUE	26S-59	26S-58	8	VC	198	0+44	0+50

TOTAL: 26 LF

CUT PROTRUDING SERVICE

SUBBASIN	STREET/ LOCATION	FROM MH	TO MH	PIPE DIA. (IN)	PIPE MAT.	APPROX. LENGTH (FT)	APPROXIMATE STATION		PROTRUDING SERVICE
							FROM	TO	APPROXIMATE STA
5	EAST MAIN STREET	26S-11	26S-10	10	VC	211	0+00	2+11	1+61
5	IRVING AVENUE	26S-59	26S-58	8	VC	198	0+00	1+98	0+44
5	IRVING AVENUE	26S-59	26S-60	8	VC	186	0+00	1+86	0+97
5	IRVING AVENUE	26S-60	26S-61	8	VC	192	0+00	1+92	1+85
5	ADELAIDE TERRACE	26S-54	26S-53	8	VC	256	0+00	2+56	2+45

TOTAL: 5 EA

SEAL PIPE CONNECTION

SUBBASIN	STREET/ LOCATION	MH	MH DEPTH (VF)
5	EAST MAIN STREET	26N-9	6.9

TOTAL: 1 MH

LEGEND

DESCRIPTION	SYMBOL
SANITARY SEWER	
SANITARY SEWER MANHOLE	S 0-00
PROPERTY LINE	
LIMITS OF SUBBASIN	
CIPP LINING	
MANHOLE REHABILITATION	

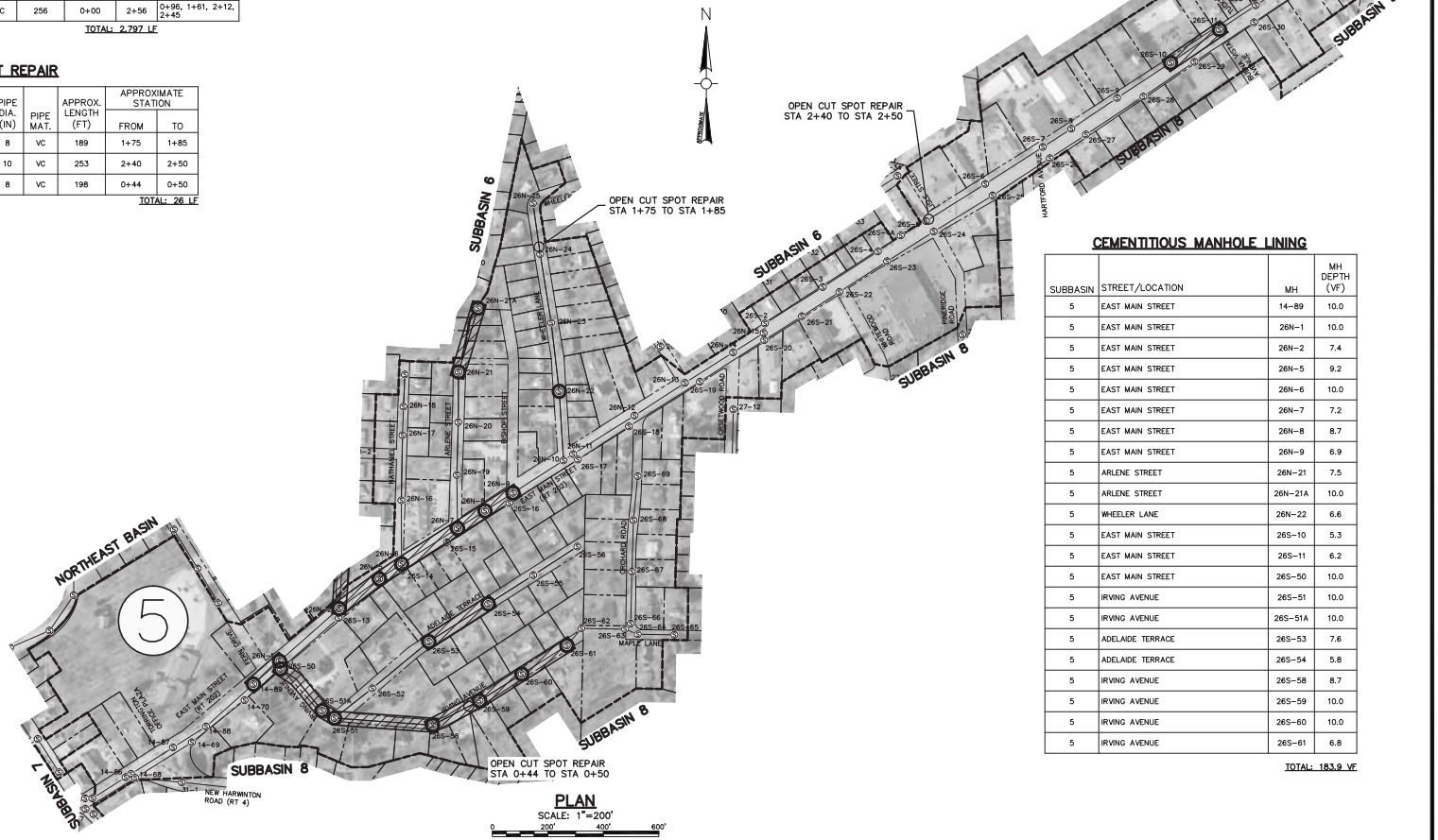

PLAN

SCALE: 1"=200'

0 200' 400' 600'

CEMENTITIOUS MANHOLE LINING

SUBBASIN	STREET/LOCATION	MH	MH DEPTH (VF)
5	EAST MAIN STREET	14-89	10.0
5	EAST MAIN STREET	26N-1	10.0
5	EAST MAIN STREET	26N-2	7.4
5	EAST MAIN STREET	26N-5	9.2
5	EAST MAIN STREET	26N-6	10.0
5	EAST MAIN STREET	26N-7	7.2
5	EAST MAIN STREET	26N-8	8.7
5	EAST MAIN STREET	26N-9	6.9
5	ARLENE STREET	26N-21	7.5
5	ARLENE STREET	26N-21A	10.0
5	WHEELER LANE	26N-22	6.6
5	EAST MAIN STREET	26S-10	5.3
5	EAST MAIN STREET	26S-11	6.2
5	EAST MAIN STREET	26S-50	10.0
5	IRVING AVENUE	26S-51	10.0
5	IRVING AVENUE	26S-51A	10.0
5	ADELAIDE TERRACE	26S-53	7.6
5	ADELAIDE TERRACE	26S-54	5.8
5	IRVING AVENUE	26S-58	8.7
5	IRVING AVENUE	26S-59	10.0
5	IRVING AVENUE	26S-60	10.0
5	IRVING AVENUE	26S-61	6.8

TOTAL: 183.9 VF

Weston&Sampson®
273 Dividend Road, Rocky Hill, CT 06067
(860) 513-1473 (800) SAMPSON
www.westonandsampson.com

No.	Date	Dr.By	Ck.By	App.By	Description
A		P	P	R	O V E D

May 9, 2016
DATE

REGISTERED PROFESSIONAL ENGINEER

CITY OF TORRINGTON, CONNECTICUT
DEPARTMENT OF PUBLIC WORKS – WATER POLLUTION CONTROL AUTHORITY
EAST TORRINGTON SEWER REHABILITATION PROJECT

SUBBASIN 5 REHABILITATION LOCATION PLAN AND TABLES

FILE NAME	JOB NO.	SCALE	DR.BY	DSN.BY	CHK.BY	APP.BY
SEWER REHAB.DWG	2130392	1"=200'	DCM	DCM	WGS	CBM

C-8

FILE NO.

SHEET 10 OF 18

R:\Torrington CT\Wastewater Services\Task Order 1 – Sewer Rehab\Rehab CAD\SEWER REHAB.dwg

LEGEND

DESCRIPTION	SYMBOL
SANITARY SEWER	
SANITARY SEWER MANHOLE	0-00
PROPERTY LINE	
LIMITS OF SUBBASIN	
CIPP LINING	
MANHOLE REHABILITATION	

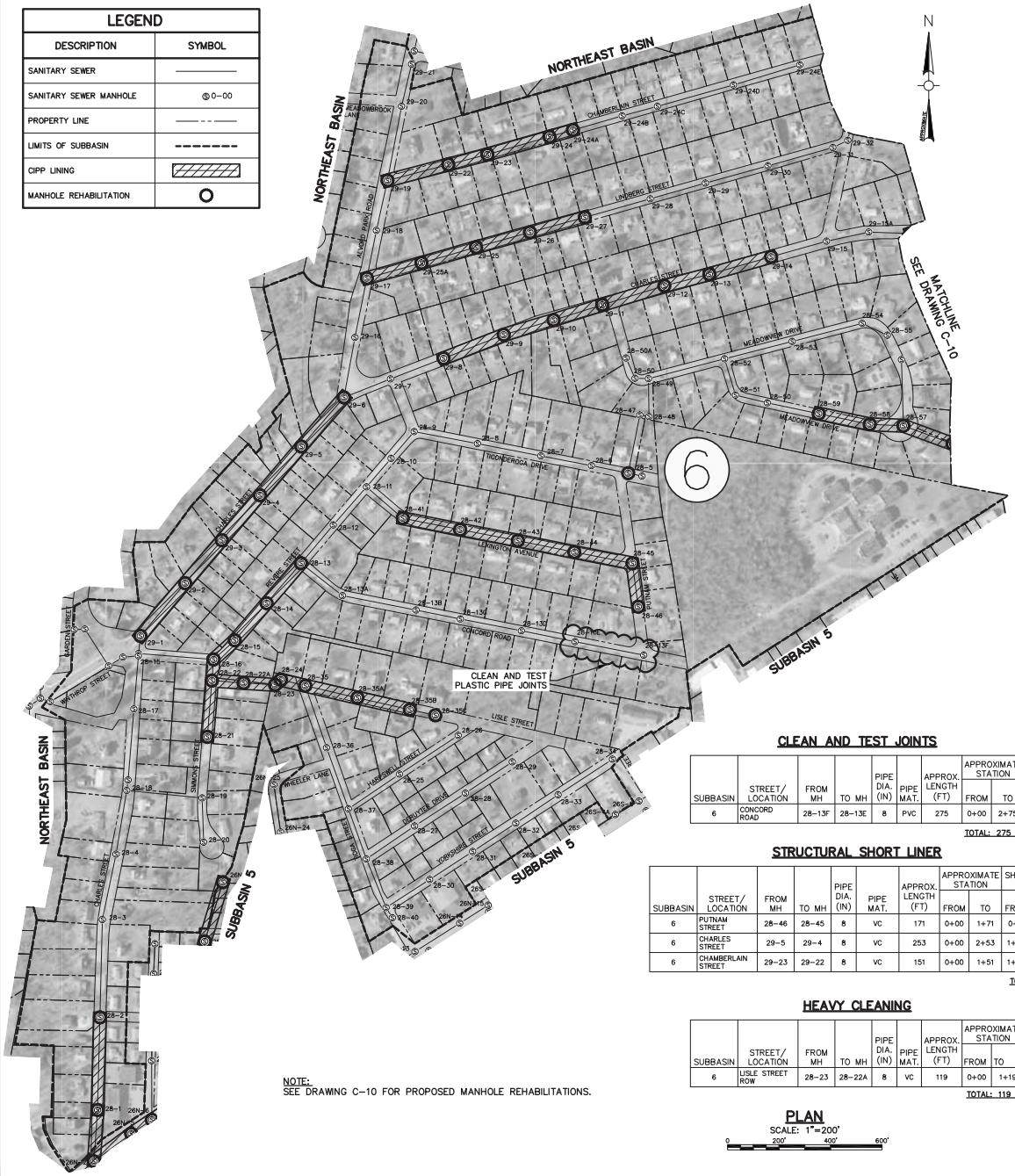

NOTE:
SEE DRAWING C-10 FOR PROPOSED MANHOLE REHABILITATIONS.

CLEAN AND TEST JOINTS

SUBBASIN	STREET/ LOCATION	FROM MH	TO MH	PIPE DIA. (IN)	PIPE MAT.	APPROX. LENGTH (FT)	APPROXIMATE STATION FROM	APPROXIMATE STATION TO
6	CONCORD ROAD	28-13F	28-13E	8	PVC	275	0+00	2+75

TOTAL: 275 LF

STRUCTURAL SHORT LINER

SUBBASIN	STREET/ LOCATION	FROM MH	TO MH	PIPE DIA. (IN)	PIPE MAT.	APPROX. LENGTH (FT)	APPROXIMATE STATION FROM	APPROXIMATE STATION TO	SHORT LINER LIMITS FROM	SHORT LINER LIMITS TO
6	PUTNAM STREET	28-46	28-45	8	VC	171	0+00	1+71	0+11	0+18
6	CHARLES STREET	29-5	29-4	8	VC	253	0+00	2+53	1+07	1+13
6	CHAMBERLAIN STREET	29-23	29-22	8	VC	151	0+00	1+51	1+45	1+49

TOTAL: 17 LF

HEAVY CLEANING

SUBBASIN	STREET/ LOCATION	FROM MH	TO MH	PIPE DIA. (IN)	PIPE MAT.	APPROX. LENGTH (FT)	APPROXIMATE STATION FROM	APPROXIMATE STATION TO
6	LISLE STREET ROW	28-23	28-22A	8	VC	119	0+00	1+19

TOTAL: 119 LF

PLAN

SCALE: 1"=200'

0 200' 400' 600'

CIPP LINING

SUBBASIN	STREET/ LOCATION	FROM MH	TO MH	PIPE DIA. (IN)	PIPE MAT.	APPROX. LENGTH (FT)	APPROXIMATE STATION FROM	APPROXIMATE STATION TO	REINSTATE SERVICE APPROXIMATE STA
6	CHARLES STREET	28-1	26N-2	8	VC	199	0+00	1+99	RE-INSPECT BEFORE LINING
6	CHARLES STREET	28-2	28-1	8	VC	365	0+00	3+65	0+60, 1+02, 1+52, 1+60, 2+50, 3+14, 3+54
6	REVERE STREET	28-14	28-13	8	VC	207	0+00	2+07	0+73, 1+85, 1+97
6	REVERE STREET	28-14	28-15	8	VC	195	0+00	1+95	0+74, 0+85, 1+46, 1+69
6	REVERE STREET	28-15	28-16	8	VC	113	0+00	1+13	0+30
6	SIMMONS STREET	28-21	28-22	8	VC	223	0+00	2+23	0+05, 0+16, 1+19, 1+33, 1+55
6	SIMMONS STREET	28-22	28-16	8	VC	80	0+00	0+80	0+71
6	LISLE STREET ROW	28-22A	28-22	8	VC	122	0+00	1+22	0+60
6	LISLE STREET ROW	28-23	28-22A	8	VC	119	0+00	1+19	NONE
6	LISLE STREET ROW	28-24	28-23	8	VC	29	0+00	0+29	NONE
6	LISLE STREET ROW	28-35	28-24	8	VC	100	0+00	1+00	0+39, 0+68
6	LISLE STREET	28-35A	28-35	8	VC	213	0+00	2+13	0+90, 1+72, 2+07
6	LISLE STREET	28-35B	38-35A	8	VC	212	0+00	2+12	0+25, 0+48, 1+47, 1+90
6	LEXINGTON AVENUE	28-42	28-41	8	VC	231	0+00	2+31	0+40, 0+43, 0+95, 1+31, 1+44, 1+89
6	LEXINGTON AVENUE	28-43	28-42	8	VC	228	0+00	2+28	0+09, 0+12, 0+57, 0+61, 1+06, 1+12, 1+60, 1+63, 2+09, 2+15
6	LEXINGTON AVENUE	28-44	28-43	8	VC	229	0+00	2+29	0+36, 0+39, 0+84, 0+87, 1+36, 1+39, 1+87, 1+90
6	LEXINGTON AVENUE	28-45	28-44	8	VC	230	0+00	2+30	0+09, 1+03, 1+12, 1+69, 1+96, 2+17
6	PUTNAM STREET	28-46	28-45	8	VC	171	0+00	1+71	0+03, 1+16
6	MEADOWVIEW DRIVE	28-57	28-57A	8	VC	204	0+00	2+04	0+29
6	MEADOWVIEW DRIVE	28-58	28-57	8	VC	134	0+00	1+34	0+59, 1+11
6	MEADOWVIEW DRIVE	28-58	28-59	8	VC	205	0+00	2+05	0+24, 0+26, 1+15, 1+77
6	CHARLES STREET	29-1	29-2	8	VC	268	0+00	2+68	0+18, 0+29, 2+55
6	CHARLES STREET	29-3	29-2	8	VC	224	0+00	2+24	0+08, 0+13, 0+69, 1+56
6	CHARLES STREET	29-4	29-3	8	VC	236	0+00	2+36	0+14, 0+31, 0+90, 1+77, 1+84
6	CHARLES STREET	29-5	29-4	8	VC	253	0+00	2+53	0+15, 0+59, 0+93, 1+13, 1+40, 1+94, 2+18
6	CHARLES STREET	29-6	29-5	8	VC	252	0+00	2+52	RE-INSPECT BEFORE LINING
6	CHARLES STREET	29-8	29-9	8	VC	245	0+00	2+45	0+02, 0+72, 0+86, 1+51, 1+84, 2+38
6	CHARLES STREET	29-9	29-10	8	VC	203	0+00	2+03	0+12, 0+78, 1+17, 1+61, 1+78
6	CHARLES STREET	29-11	29-10	8	VC	203	0+00	2+03	0+53, 0+92, 1+10, 1+70, 1+78
6	CHARLES STREET	29-11	29-12	8	VC	252	0+00	2+52	RE-INSPECT BEFORE LINING
6	CHARLES STREET	29-12	29-13	8	VC	180	0+00	1+80	RE-INSPECT BEFORE LINING
6	CHARLES STREET	29-14	29-13	8	VC	253	0+00	2+53	0+26, 0+50, 1+09, 1+68, 2+07, 2+30
6	CHAMBERLAIN STREET	29-22	29-19	8	VC	254	0+00	2+54	1+33, 1+42, 2+25
6	CHAMBERLAIN STREET	29-23	29-22	8	VC	151	0+00	1+51	0+19, 0+67, 1+23, 1+47
6	CHAMBERLAIN STREET	29-24	29-23	8	VC	256	0+00	2+56	0+83, 0+90, 1+82, 2+06
6	CHAMBERLAIN STREET	29-24A	29-24	8	VC	95	0+00	0+95	0+10, 0+76
6	LINDBERG STREET	29-25A	29-17	8	VC	225	0+00	2+25	0+41, 1+21, 1+48
6	LINDBERG STREET	29-25	29-25A	8	VC	224	0+00	2+24	0+27, 0+46, 1+02, 1+57, 2+01
6	LINDBERG STREET	29-26	29-25	8	VC	221	0+00	2+21	0+48, 0+70, 1+37, 1+67, 1+98
6	LINDBERG STREET	29-27	29-26	8	VC	223	0+00	2+23	0+20, 0+96, 1+14, 1+85, 2+00

TOTAL: 8,027 LF

CUT PROTRUDING SERVICE

SUBBASIN	STREET/ LOCATION	FROM MH	TO MH	PIPE DIA. (IN)	PIPE MAT.	APPROX. LENGTH (FT)	APPROXIMATE STATION FROM	APPROXIMATE STATION TO	PROTRUDING SERVICE APPROXIMATE STA
6	REVERE STREET	28-14	28-15	8	VC	195	0+00	1+95	0+74, 0+85
6	REVERE STREET	28-15	28-16	8	VC	113	0+00	1+13	0+30
6	LISLE STREET ROW	28-35	28-24	8	VC	100	0+00	1+00	0+68
6	CHARLES STREET	29-1	29-2	8	VC	268	0+00	2+68	0+29, 2+55
6	CHARLES STREET	29-4	29-3	8	VC	236	0+00	2+36	0+31, 0+90, 1+84
6	CHARLES STREET	29-8	29-9	8	VC	245	0+00	2+45	2+38
6	CHARLES STREET	29-11	29-10	8	VC	203	0+00	2+03	0+92, 1+10, 1+70, 1+78
6	LINDBERG STREET	29-26	29-25	8	VC	221	0+00	2+21	0+48

TOTAL: 15 EA

Weston&Sampson®
273 Dividend Road, Rocky Hill, CT 06067
(860) 513-1473 (800) SAMPSON
www.westonandsampson.com

No.	Date	Dr.By	Ck.By	App.By	Description
A		P	P	R	O V E D

REGISTERED PROFESSIONAL ENGINEER

May 9, 2016
DATE

CITY OF TORRINGTON, CONNECTICUT
DEPARTMENT OF PUBLIC WORKS – WATER POLLUTION CONTROL AUTHORITY
EAST TORRINGTON SEWER REHABILITATION PROJECT

REHABILITATION LOCATION PLAN AND TABLES
SUBBASIN 6

C-9

FILE NAME	JOB NO.	SCALE	DR.BY	DSN.BY	CHK.BY	APP.BY
SEWER REHAB.DWG	2130392	1"=200'	DCM	DCM	WGS	CBM

FILE NO.

SHEET 11 OF 18

R:\Torrington CT\Wastewater Services\Task Order 1 – Sewer Rehab\Rehab CAD\SEWER REHAB.dwg

PLAN

SCALE: 1"=200'

0 200' 400' 600'

CIPP LINING

SUBBASIN	STREET/ LOCATION	FROM MH	TO MH	PIPE DIA. (IN)	PIPE MAT.	APPROX. LENGTH (FT)	APPROXIMATE STATION		REINSTATE SERVICE
							FROM	TO	APPROXIMATE STA
6	CHARLES STREET	29-15C	29-15B	8	VC	173	0+00	1+73	NONE
6	CHARLES STREET	29-15D	29-15C	8	VC	207	0+00	2+07	NONE
6	KNOLLWOOD STREET	29-34	29-33	8	VC	257	0+00	2+57	0+60, 0+78, 1+67
6	KNOLLWOOD STREET	29-35	29-34	8	VC	250	0+00	2+50	0+95, 1+65, 2+14
6	BONVICINI DRIVE ROW	29-38	29-37	8	VC	360	0+00	3+60	0+09, 1+45, 1+48, 2+98, 3+00 (IF UNCAPPED)
6	BONVICINI DRIVE ROW	29-38B	29-38	8	VC	202	0+00	2+02	0+50, 1+56, 1+58 (IF UNCAPPED)
6	BONVICINI DRIVE ROW	29-38A	29-38B	8	VC	200	0+00	2+00	0+44 (IF UNCAPPED)
6	PILGRIM DRIVE ROW	29-39	29-37	8	VC	287	0+00	2+87	0+45, 0+47, 1+49, 2+33, 2+45 (IF UNCAPPED)
6	PILGRIM DRIVE ROW	29-40	29-39	8	VC	142	0+00	1+42	0+81 (IF UNCAPPED)

TOTAL: 2,078 LF

HEAVY CLEANING

SUBBASIN	STREET/ LOCATION	FROM MH	TO MH	PIPE DIA. (IN)	PIPE MAT.	APPROX. LENGTH (FT)	APPROXIMATE STATION	
							FROM	TO
6	BONVICINI DRIVE ROW	29-38B	29-38	8	VC	202	0+00	2+02
6	BONVICINI DRIVE ROW	29-38A	29-38B	8	VC	200	0+00	2+00

TOTAL: 402 LF

SEAL PIPE CONNECTION

SUBBASIN	STREET/LOCATION	MH	MH DEPTH (VF)
6	REVERE STREET	28-13	6.8
6	CHARLES STREET	29-15C	8.0
6	BONVICINI DRIVE ROW	29-38	7.6

TOTAL: 3 MH

REBUILD BENCH/INVERT

SUBBASIN	STREET/LOCATION	MH	MH DEPTH (VF)
6	PUTNAM STREET	28-45	7.0
6	PUTNAM STREET	28-46	2.5

TOTAL: 2 EA

CEMENTITIOUS MANHOLE LINING

SUBBASIN	STREET/LOCATION	MH	MH DEPTH (VF)
6	CHARLES STREET	28-1	10.0
6	CHARLES STREET	28-2	10.0
6	REVERE STREET	28-13	6.8
6	REVERE STREET	28-14	10.0
6	REVERE STREET	28-15	10.0
6	SIMMONS STREET	28-16	10.0
6	SIMMONS STREET	28-21	4.2
6	SIMMONS STREET	28-22	8.7
6	LISLE STREET ROW	28-22A	7.1
6	LISLE STREET ROW	28-23	10.0
6	LISLE STREET ROW	28-24	7.2
6	LISLE STREET	28-35	8.8
6	LISLE STREET	28-35A	10.0
6	LISLE STREET	28-35B	10.0
6	LEXINGTON AVENUE	28-41	7.1
6	LEXINGTON AVENUE	28-42	7.0
6	LEXINGTON AVENUE	28-43	10.0
6	LEXINGTON AVENUE	28-44	7.5
6	PUTNAM STREET	28-45	7.0
6	PUTNAM STREET	28-46	2.5
6	MEADOWVIEW AVENUE	28-57	7.0
6	MEADOWVIEW AVENUE ROW	28-57A	8.0
6	MEADOWVIEW AVENUE ROW	28-58	8.3
6	MEADOWVIEW AVENUE	28-59	6.3
6	CHARLES STREET	29-1	8.1
6	CHARLES STREET	29-2	7.1
6	CHARLES STREET	29-3	8.0
6	CHARLES STREET	29-4	8.7
6	CHARLES STREET	29-5	8.5
6	CHARLES STREET	29-6	9.0
6	CHARLES STREET	29-8	9.0
6	CHARLES STREET	29-9	9.2
6	CHARLES STREET	29-10	10.0
6	CHARLES STREET	29-11	8.2
6	CHARLES STREET	29-12	10.0
6	CHARLES STREET	29-13	10.0
6	CHARLES STREET	29-14	10.0
6	CHARLES STREET	29-15B	8.2
6	CHARLES STREET	29-15C	8.0
6	CHARLES STREET	29-15D	6.7
6	ALVORD PARK ROAD	29-17	8.2
6	ALVORD PARK ROAD	29-19	7.5
6	CHAMBERLAIN STREET	29-22	6.4
6	CHAMBERLAIN STREET	29-23	9.0
6	CHAMBERLAIN STREET	29-24	10.0
6	CHAMBERLAIN STREET	29-24A	10.0
6	LINDBERG STREET	29-25	10.0
6	LINDBERG STREET	29-25A	7.6
6	LINDBERG STREET	29-26	7.6
6	LINDBERG STREET	29-27	8.2
6	KNOLLWOOD DRIVE	29-33	9.2
6	KNOLLWOOD DRIVE	29-34	7.1
6	BONVICINI DRIVE ROW	29-38	7.6
6	BONVICINI DRIVE ROW	29-38A	7.4
6	BONVICINI DRIVE ROW	29-38B	8.6
6	PILGRIM STREET	29-39	8.3
6	PILGRIM STREET ROW	29-40	10.0

TOTAL: 474.9 VF

LEGEND

DESCRIPTION	SYMBOL
SANITARY SEWER	
SANITARY SEWER MANHOLE	S 0-00
PROPERTY LINE	
LIMITS OF SUBBASIN	
CIPP LINING	
MANHOLE REHABILITATION	

Weston & Sampson®
273 Dividend Road, Rocky Hill, CT 06067
(860) 513-1473 (800) SAMPSON
www.westonandsampson.com

No.	Date	Dr.By	Ck.By	App.By	Description
A		P	R	O	V E D

REGISTERED PROFESSIONAL ENGINEER

May 9, 2016
DATE

STATE OF CONNECTICUT CHRISTOPHER B. MYSTER NO. 17476 REGISTERED PROFESSIONAL ENGINEER

CITY OF TORRINGTON, CONNECTICUT
DEPARTMENT OF PUBLIC WORKS – WATER POLLUTION CONTROL AUTHORITY
EAST TORRINGTON SEWER REHABILITATION PRJECT

REHABILITATION LOCATION PLAN AND TABLES

SUBBASIN 6

FILE NAME	JOB NO.	SCALE	DR.BY	DSN.BY	CHK.BY	APP.BY
SEWER REHAB.DWG	2130392	1"=200'	DCM	DCM	WGS	CBM

C-10

FILE NO.

SHEET 12 OF 18

R:\Torrington CT\Wastewater Services\Task Order 1 – Sewer Rehab\Rehab CAD\SEWER REHAB.dwg

LEGEND

DESCRIPTION	SYMBOL
SANITARY SEWER	————
SANITARY SEWER MANHOLE	0-00
PROPERTY LINE	——— - - ———
LIMITS OF SUBBASIN	- - - - - - -
CIPP LINING	
MANHOLE REHABILITATION	O

STRUCTURAL SHORT LINER

SUBBASIN	STREET/ LOCATION	FROM MH	TO MH	PIPE DIA. (IN)	PIPE MAT.	APPROX. LENGTH (FT)	APPROXIMATE STATION		SHORT LINER LIMITS	
							FROM	TO	FROM	TO
7	HILLSIDE AVENUE	24-5	25-4	8	VC	195	0+00	1+95	1+55	1+62

TOTAL: 7 LF

CUT PROTRUDING SERVICE

SUBBASIN	STREET/ LOCATION	FROM MH	TO MH	PIPE DIA. (IN)	PIPE MAT.	APPROX. LENGTH (FT)	APPROXIMATE STATION		PROTRUDING SERVICE
							FROM	TO	APPROXIMATE STA
7	HILLSIDE AVENUE	25-1	25-2	8	VC	123	0+00	1+23	0+52, 0+53, 1+13
7	HORNFISCHER TERRACE	25-9	25-8	8	VC	148	0+00	1+48	0+54
7	BENPORTE TERRACE	25-12	25-11	8	VC	228	0+00	2+28	0+98, 2+03
7	BARTON STREET	26-9	26-8	8	VC	263	0+00	2+63	0+31
7	BARTON STREET	26-10	26-9	8	VC	263	0+00	2+63	1+41, 1+91, 1+92
7	DARLING STREET	26-18	26-17	8	VC	232	0+00	2+32	2+11
7	CLEARVIEW AVENUE	26-22	26-21	8	VC	203	0+00	2+03	0+05

TOTAL: 12 EA

OPEN CUT SPOT REPAIR

SUBBASIN	STREET/LOCATION	FROM MH	TO MH	PIPE DIA. (IN)	MAT.	APPROX. LENGTH (FT)	APPROXIMATE STATION	
							FROM	TO
7	HILLSIDE AVENUE	24-5	25-4	8	VC	195	1+28	1+36

TOTAL: 8 LF

CLEAN AND TEST JOINTS

SUBBASIN	STREET/ LOCATION	FROM MH	TO MH	PIPE DIA. (IN)	PIPE MAT.	APPROX. LENGTH (FT)	APPROXIMATE STATION	
							FROM	TO
7	CLEARVIEW AVENUE ROW	26-23	26-27	8	ABS	20	0+00	0+20
7	CLEARVIEW AVENUE ROW	26-27	26-28	8	ABS	332	0+00	3+32
7	SILBRO DRIVE	26-29	26-28	8	ABS	311	0+00	3+11
7	SILBRO DRIVE	26-30	26-29	8	ABS	312	0+00	3+12
7	APTER DRIVE	26-32	26-31	8	ABS	181	0+00	1+81
7	FREDERICK STREET	26-37	26-36	8	TRUSS	127	0+00	1+27

TOTAL: 1,283 LF

CIPP LINING

SUBBASIN	STREET/LOCATION	FROM MH	TO MH	PIPE DIA. (IN)	MAT.	APPROX. LENGTH (FT)	APPROXIMATE STATION		REINSTATE SERVICE
							FROM	TO	APPROX. STA
7	HILLSIDE AVENUE	14-64	25-1A	8	VC	280	0+00	2+80	RE-INSPECT BEFORE LINING
7	HILLSIDE AVENUE	25-1A	25-1B	8	VC	220	0+00	2+20	RE-INSPECT BEFORE LINING
7	HILLSIDE AVENUE	25-1B	25-1	8	VC	125	0+00	1+25	RE-INSPECT BEFORE LINING
7	HILLSIDE AVENUE	25-1	25-2	8	VC	123	0+00	1+23	0+52, 0+53, 1+13
7	HILLSIDE AVENUE	25-3	25-2	8	VC	76	0+00	0+76	NONE
7	HILLSIDE AVENUE	25-3	25-4	8	VC	177	0+00	1+77	0+40, 0+96, 1+06, 1+26, 1+68
7	HILLSIDE AVENUE	24-5	25-4	8	VC	195	0+00	1+95	0+09, 0+62, 0+80, 1+55, 1+65
7	HILLSIDE AVENUE	24-5	24-23	8	VC	134	0+00	1+34	0+16, 1+08
7	HORNFISCHER TERRACE	25-6	25-1	8	VC	118	0+00	1+18	0+65
7	HORNFISCHER TERRACE	25-7	25-6	8	VC	165	0+00	1+65	0+64, 1+20, 1+31
7	HORNFISCHER TERRACE	25-8	25-7	8	VC	147	0+00	1+47	0+04, 0+96, 1+04
7	HORNFISCHER TERRACE	25-9	25-8	8	VC	148	0+00	1+48	0+43, 0+54, 1+18, 1+23
7	BENPORTE TERRACE	25-11	25-10	8	VC	143	0+00	1+43	0+42
7	BENPORTE TERRACE	25-12	25-11	8	VC	228	0+00	2+28	0+98, 1+00, 1+48, 2+01, 2+03
7	BARTON STREET	26-9	26-8	8	VC	263	0+00	2+63	0+31, 0+36, 0+84, 1+85, 2+05
7	BARTON STREET	26-10	26-9	8	VC	263	0+00	2+63	0+16, 0+40, 1+41, 1+91, 1+92, 2+16, 2+48
7	DARLING STREET	26-16	26-15	8	VC	202	0+00	2+02	0+63, 0+80, 0+99, 1+63, 1+94
7	DARLING STREET	26-17	26-16	8	VC	233	0+00	2+33	0+78, 1+25, 1+28, 1+75, 2+29, 2+31
7	DARLING STREET	26-18	26-17	8	VC	232	0+00	2+32	0+07, 0+47, 1+43, 1+75, 2+08, 2+11
7	CLEARVIEW AVENUE	26-21	26-20	8	VC	205	0+00	2+05	0+38, 1+00, 1+55
7	CLEARVIEW AVENUE	26-22	26-21	8	VC	203	0+00	2+03	0+05, 0+38, 0+71, 1+26, 1+59
7	CLEARVIEW AVENUE	26-22	26-23	8	VC	170	0+00	1+70	RE-INSPECT BEFORE LINING
7	CLEARVIEW AVENUE	26-24	26-23	8	VC	166	0+00	1+66	0+25, 0+50, 1+17, 1+52
7	CLEARVIEW AVENUE	26-25	26-24	8	VC	160	0+00	1+60	0+43, 0+64, 1+22, 1+32
7	FREDERICK STREET	26-34	26-25	8	VC	253	0+00	2+53	0+66, 0+68, 1+76
7	FREDERICK STREET	26-35	26-34	8	VC	255	0+00	2+55	0+21, 0+42, 0+86, 1+24, 1+61, 2+18, 2+39
7	FREDERICK STREET	26-35	26-36	8	VC	115	0+00	1+15	0+29

TOTAL: 4,999 LF

CEMENTITIOUS MANHOLE LINING

SUBBASIN	STREET/LOCATION	MH	MH DEPTH (VF)
7	EAST MAIN STREET	14-64	10.0
7	HILLSIDE AVENUE	24-23	10.0
7	HILLSIDE AVENUE	25-1	7.0
7	HILLSIDE AVENUE	25-1A	10.0
7	HILLSIDE AVENUE	25-1B	10.0
7	HILLSIDE AVENUE	25-4	4.6
7	HILLSIDE AVENUE	25-5	10.0
7	HORNFISCHER TERRACE	25-6	10.0
7	HORNFISCHER TERRACE	25-7	7.5
7	HORNFISCHER TERRACE	25-8	7.5
7	HORNFISCHER TERRACE	25-9	5.6
7	BENPORTE TERRACE	25-11	6.2
7	BENPORTE TERRACE	25-12	10.0
7	BARTON STREET	26-8	10.0
7	BARTON STREET	26-9	7.9
7	BARTON STREET	26-10	7.9
7	DARLING STREET	26-15	8.8
7	DARLING STREET	26-16	8.8
7	DARLING STREET	26-17	10.0
7	DARLING STREET	26-18	10.0
7	CLEARVIEW AVENUE	26-21	10.0
7	CLEARVIEW AVENUE	26-22	7.4
7	CLEARVIEW AVENUE	26-23	10.0
7	CLEARVIEW AVENUE	26-24	7.2
7	FREDERICK STREET	26-25	8.8
7	CLEARVIEW AVENUE	26-27	10.0
7	SILBRO DRIVE ROW	26-28	9.9
7	SILBRO DRIVE	26-29	6.9
7	APTER DRIVE	26-30	6.2
7	APTER DRIVE	26-32	7.4
7	FREDERICK STREET	26-34	7.7
7	FREDERICK STREET	26-35	7.9

TOTAL: 271.2 VF

SEAL PIPE CONNECTION

SUBBASIN	STREET/LOCATION	MH	MH DEPTH (VF)
7	SILBRO DRIVE	26-29	6.9000
7	APTER DRIVE	26-30	6.2000
7	FREDERICK STREET	26-34	7.7000

TOTAL: 3 MH

REBUILD BENCH/INVERT

SUBBASIN	STREET/LOCATION	MH	MH DEPTH (VF)
7	EAST MAIN STREET	14-64	10.0
7	APTER DRIVE	26-32	7.4

TOTAL: 2 EA

REPLACE MANHOLE

SUBBASIN	STREET/LOCATION	MH	MH DEPTH (VF)
7	HILLSIDE AVENUE	25-2	10.0

TOTAL: 1 EA

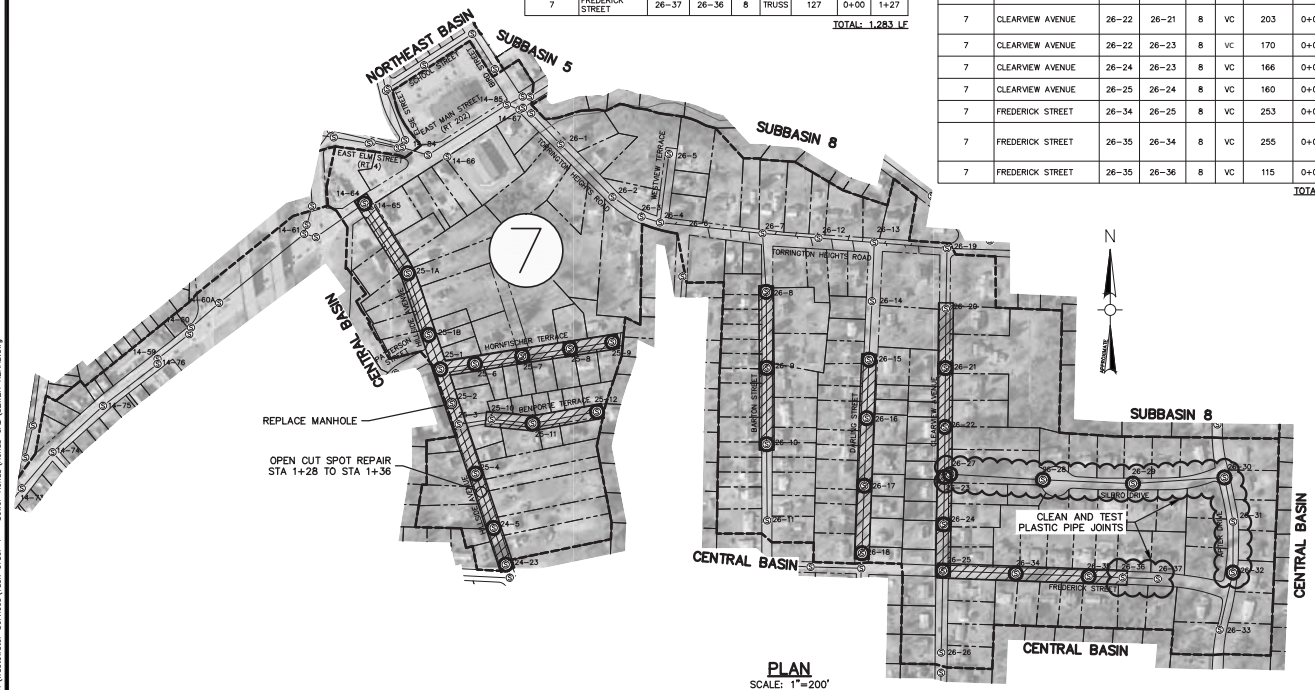

PLAN
SCALE: 1"=200'
0 200' 400' 600'

R:\Torrington CT\Wastewater Services\Task Order 1 - Sewer Rehab\Rehab CAD\SEWER REHAB.dwg

Weston&Sampson®
273 Dividend Road, Rocky Hill, CT 06067
(860) 513-1473 (800) SAMPSON
www.westonandsampson.com

No.	Date	Dr.By	Ck.By	App.By	Description
A	P	P	R	O	V E D

REGISTERED PROFESSIONAL ENGINEER
May 9, 2016
DATE

CITY OF TORRINGTON, CONNECTICUT
DEPARTMENT OF PUBLIC WORKS - WATER POLLUTION CONTROL AUTHORITY
EAST TORRINGTON SEWER REHABILITATION PRJECT

REHABILITATION LOCATION PLAN AND TABLES
SUBBASIN 7

FILE NAME	JOB NO.	SCALE	DR.BY	DSN.BY	CHK.BY	APP.BY
SEWER REHAB.DWG	2130392	1"=200'	DCM	DCM	WCS	CBM

C-11

FILE NO.

CUT PROTRUDING SERVICE

SUBBASIN	STREET/ LOCATION	FROM MH	TO MH	PIPE DIA. (IN)	PIPE MAT.	APPROX. LENGTH (FT)	APPROXIMATE STATION		PROTRUDING SERVICE
							FROM	TO	APPROXIMATE STA
8	CRESTWOOD ROAD	27-8	27-7	8	VC	167	0+00	1+67	1+40
8	DEEPWOOD ROAD	27-27	27-26	8	VC	148	0+00	1+48	0+84
8	PINERIDGE ROAD ROW	27-35	27-31	8	VC	270	0+00	2+70	2+23

TOTAL: 3 EA

CIPP LINING

SUBBASIN	STREET/ LOCATION	FROM MH	TO MH	PIPE DIA. (IN)	MAT.	APPROX. LENGTH (FT)	APPROX. STATION		REINSTATE SERVICE
							FROM	TO	APPROX. STA
8	CRESTWOOD ROAD	27-7	27-4	8	VC	152	0+00	1+52	0+53
8	CRESTWOOD ROAD	27-8	27-7	8	VC	167	0+00	1+67	0+43, 1+40
8	DEEPWOOD ROAD	27-27	27-26	8	VC	148	0+00	1+48	0+84
8	HARTFORD AVENUE	27-36	27-35	8	VC	205	0+00	2+05	0+53
8	PINERIDGE ROAD ROW	27-35	27-31	8	VC	270	0+00	2+70	0+88, 0+90, 2+23
8	HARTFORD AVENUE	27-37	27-36	8	VC	272	0+00	2+72	0+33, 1+86
8	PINERIDGE ROAD	27-53	27-52	8	VC	173	0+00	1+73	0+10, 0+19, 1+24, 1+29
8	BEVERLY ROAD	27-57	27-54	8	VC	203	0+00	2+03	0+05, 0+79, 1+04, 1+80
8	BEVERLY ROAD	27-58	27-57	8	VC	227	0+00	2+27	0+22, 1+05, 1+30, 2+19
8	BEVERLY ROAD	27-59	27-58	8	VC	230	0+00	2+30	0+05, 1+23, 1+40, 2+24

TOTAL: 2,047 LF

OPEN CUT SPOT REPAIR

SUBBASIN	STREET/ LOCATION	FROM MH	TO MH	PIPE DIA. (IN)	MAT.	APPROX. LENGTH (FT)	APPROX. STATION	
							FROM	TO
8	PINERIDGE ROAD ROW	27-35	27-31	8	VC	270	1+94	2+06

TOTAL: 12 LF

HEAVY CLEANING

SUBBASIN	STREET/ LOCATION	FROM MH	TO MH	PIPE DIA. (IN)	PIPE MAT.	APPROX. LENGTH (FT)	APPROXIMATE STATION	
							FROM	TO
8	HARTFORD AVENUE	27-36	27-35	8	VC	205	0+00	2+05

TOTAL: 205 LF

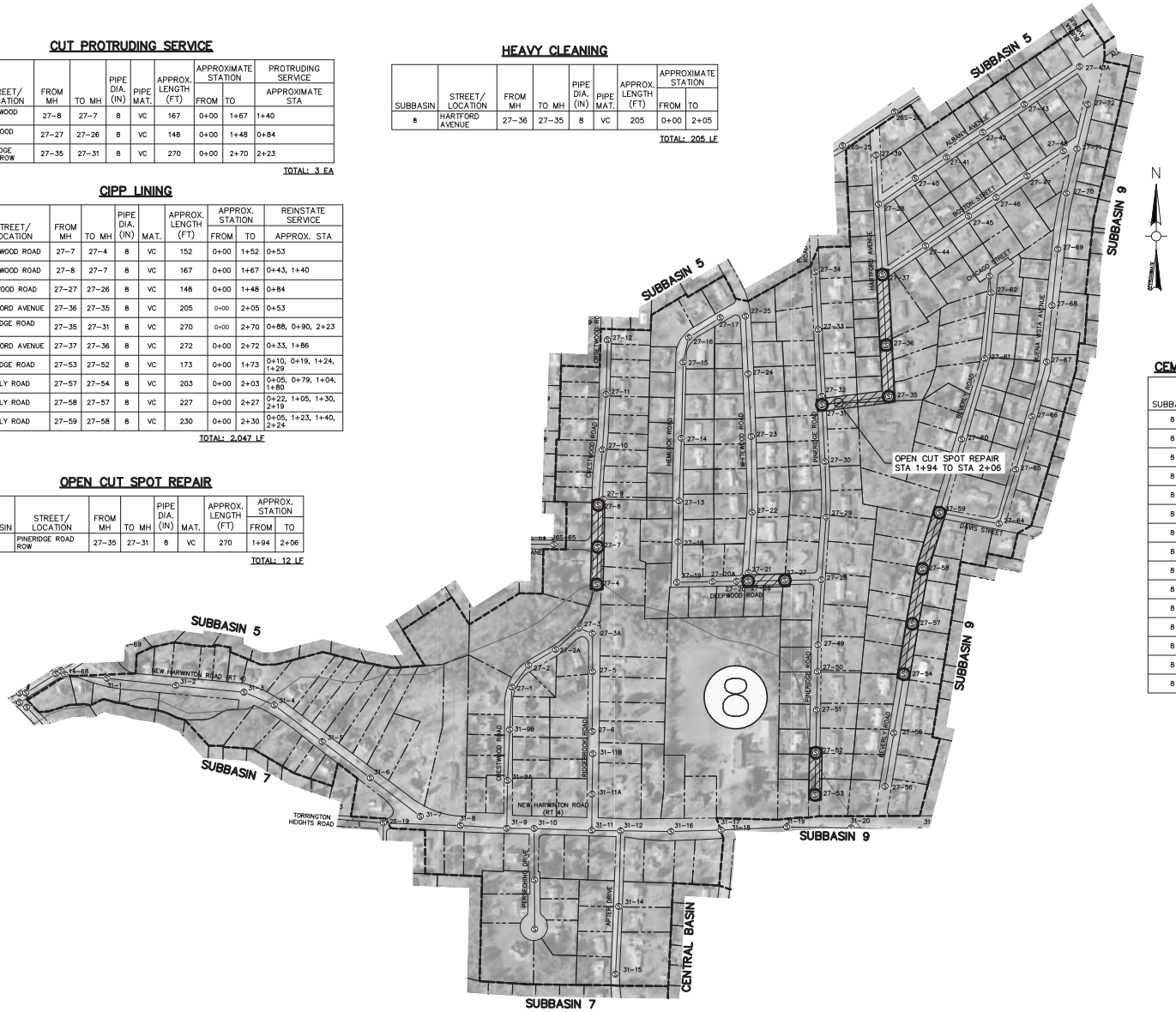

LEGEND

DESCRIPTION	SYMBOL
SANITARY SEWER	
SANITARY SEWER MANHOLE	0-00
PROPERTY LINE	
LIMITS OF SUBBASIN	
CIPP LINING	
MANHOLE REHABILITATION	

CEMENTITIOUS MANHOLE LINING

SUBBASIN	STREET/LOCATION	MH	MH DEPTH (VF)
8	CRESTWOOD ROAD	27-4	8.5
8	CRESTWOOD ROAD	27-7	8.7
8	CRESTWOOD ROAD	27-8	7.0
8	DEEPWOOD ROAD	27-26	7.4
8	DEEPWOOD ROAD	27-27	8.1
8	PINERIDGE ROAD	27-31	7.5
8	HARTFORD AVENUE	27-35	7.1
8	HARTFORD AVENUE	27-36	5.3
8	HARTFORD AVENUE	27-37	6.2
8	PINERIDGE ROAD	27-52	6.2
8	PINERIDGE ROAD	27-53	5.8
8	BEVERLY ROAD	27-54	11.4
8	BEVERLY ROAD	27-57	10.5
8	BEVERLY ROAD	27-58	6.7
8	BEVERLY ROAD	27-59	7.0

TOTAL: 113.4 VF

PLAN

SCALE: 1"=200'

0 200' 400' 600'

Weston&Sampson®
273 Dividend Road, Rocky Hill, CT 06067
(860) 513-1473 (800) SAMPSON
www.westonandsampson.com

No.	Date	Dr.By	Ck.By	App.By	Description
A	P	P	R	O	V E D

REGISTERED PROFESSIONAL ENGINEER

May 9, 2016
DATE

STATE OF CONNECTICUT CHRISTOPHER B. WEBSTER NO. 17476 REGISTERED PROFESSIONAL ENGINEER

CITY OF TORRINGTON, CONNECTICUT
DEPARTMENT OF PUBLIC WORKS – WATER POLLUTION CONTROL AUTHORITY
EAST TORRINGTON SEWER REHABILITATION PROJECT

SUBBASIN 8
REHABILITATION LOCATION PLAN AND TABLES

FILE NAME	JOB NO.	SCALE	DR.BY	DSN.BY	CHK.BY	APP.BY
SEWER REHAB.DWG	2130392	1"=200'	DCM	DCM	WCS	CBM

C-12

FILE NO.

R:\Torrington CT\Wastewater Services\Task Order 1 – Sewer Rehab\Rehab CAD\SEWER REHAB.dwg

LEGEND	
DESCRIPTION	SYMBOL
SANITARY SEWER	
SANITARY SEWER MANHOLE	0-00
PROPERTY LINE	
LIMITS OF SUBBASIN	
CIPP LINING	
MANHOLE REHABILITATION	

CIPP LINING

SUBBASIN	STREET/ LOCATION	FROM MH	TO MH	PIPE DIA. (IN)	MAT.	APPROX. LENGTH (FT)	APPROX. STATION		REINSTATE SERVICE
							FROM	TO	APPROX. STA
9	FAIRLAWN DRIVE	31-25	31-24	8	VC	228	0+00	2+28	0+63, 1+14, 1+80, 2+04
9	FAIRLAWN DRIVE	31-26	31-25	8	VC	230	0+00	2+30	0+81, 0+92, 1+92, 2+22
9	FAIRLAWN DRIVE	31-27	31-26	8	VC	230	0+00	2+30	0+44, 0+93, 1+17, 1+83, 2+01
9	FAIRLAWN DRIVE	31-27	31-28	8	VC	228	0+00	2+28	0+18, 0+58, 1+19, 1+83, 2+22
9	EDGEWOOD DRIVE	31-30	31-24	8	VC	160	0+00	1+63	1+10, 1+58
9	EDGEWOOD DRIVE	31-31	31-30	8	VC	159	0+00	1+59	0+81, 1+49
9	HIGHFIELD DRIVE	31-32	31-31	8	VC	204	0+00	2+04	0+53, 1+08, 1+19
9	HIGHFIELD DRIVE	31-33	31-32	8	VC	201	0+00	2+01	0+26, 0+39, 1+34, 1+41
9	HIGHFIELD DRIVE	31-34	31-33	8	VC	225	0+00	2+25	0+47, 0+63, 1+57, 1+69
9	HIGHFIELD DRIVE	31-35	31-34	8	VC	227	0+00	2+27	0+78, 1+21, 1+80
9	HIGHFIELD DRIVE	31-36	31-35	8	VC	228	0+00	2+28	0+09, 0+15, 1+04, 1+10, 2+05, 2+15
9	HIGHFIELD DRIVE	31-37	31-36	8	VC	232	0+00	2+32	0+27, 0+30, 1+40, 1+43
9	HIGHFIELD DRIVE	31-38	31-37	8	VC	225	0+00	2+25	0+35, 0+55, 1+51, 1+54
9	HIGHFIELD DRIVE	31-39	31-38	8	VC	241	0+00	2+41	0+21, 1+09, 1+33, 2+22, 2+25
9	EDGEWOOD DRIVE	31-40	31-39	8	VC	134	0+00	1+34	0+07, 0+20, 1+07
9	EDGEWOOD DRIVE	31-42	31-31	8	VC	188	0+00	1+88	0+22, 1+34, 1+40
9	EDGEWOOD DRIVE	31-43	31-42	8	VC	140	0+00	1+40	RE-INSPECT BEFORE LINING
9	EDGEWOOD DRIVE	31-44	31-43	8	VC	260	0+00	2+60	0+47, 0+64, 1+09, 1+64, 2+24
9	EDGEWOOD DRIVE	31-49	31-48	8	VC	230	0+00	2+30	0+32, 0+38, 1+41, 1+47
9	EDGEWOOD DRIVE	31-50	31-49	8	VC	206	0+00	2+06	0+29, 0+35, 1+33, 1+46
9	TORRINGFORD WEST STREET	31-57	31-22	8	VC	235	0+00	2+35	0+66, 1+10
9	TORRINGFORD WEST STREET	31-58	31-57	8	VC	170	0+00	1+70	RE-INSPECT BEFORE LINING
9	TORRINGFORD WEST STREET	31-59	31-58	8	VC	202	0+00	2+02	0+08, 0+11, 0+81, 1+01, 1+38, 1+86
9	TORRINGFORD WEST STREET	31-60	61-59	8	VC	225	0+00	2+25	0+53, 0+93, 1+25, 1+78, 1+94
9	TORRINGFORD WEST STREET	31-61	31-60	8	VC	228	0+00	2+28	0+10, 0+17, 0+58, 0+86, 1+05, 1+42, 1+54, 2+06, 2+21
9	TORRINGFORD WEST STREET	31-62	31-61	8	VC	228	0+00	2+28	0+13, 0+62, 1+15, 1+72, 1+88
9	MORNINGSIDE DRIVE	32B-1	32B-2	8	VC	365	0+00	3+65	0+11, 0+63, 0+66, 1+95, 2+12, 2+53, 2+73, 3+49
9	SUNRISE DRIVE	32B-2F	32B-2G	8	VC	249	0+00	2+49	0+22, 0+38, 1+66, 1+70, 2+42
9	MORNINGSIDE DRIVE ROW	32B-5	32B-14	8	VC	335	0+00	3+35	NONE
9	MORNINGSIDE DRIVE ROW	32B-15	32B-14	8	VC	190	0+00	1+90	NONE
9	HARVARD DRIVE	32B-18	32B-17	8	VC	150	0+00	1+50	0+16, 0+17, 0+18, 0+23, 0+33
9	HARVARD DRIVE	32B-19	32B-20	8	VC	71	0+00	0+71	RE-INSPECT BEFORE LINING
9	HARVARD DRIVE	32B-20	32B-22	8	VC	345	0+00	3+45	0+45, 0+92, 1+24, 1+95, 2+21, 2+90, 3+11
9	HARVARD DRIVE	32B-22	32B-23	8	VC	173	0+00	1+73	0+11, 0+56, 0+69
9	HARVARD DRIVE	32B-24	32B-23	8	VC	148	0+00	1+48	0+27, 0+70, 1+07, 1+34

TOTAL: 7,490 LF

CUT PROTRUDING SERVICE

SUBBASIN	STREET/ LOCATION	FROM MH	TO MH	PIPE DIA. (IN)	PIPE MAT.	APPROX. LENGTH (FT)	APPROXIMATE STATION		PROTRUDING SERVICE
							FROM	TO	APPROXIMATE STA
9	FAIRLAWN DRIVE	31-26	31-25	8	VC	230	0+00	2+30	2+22
9	HIGHFIELD DRIVE	31-32	31-31	8	VC	204	0+00	2+04	0+53
9	HARVARD DRIVE	32B-20	32B-22	8	VC	345	0+00	3+45	0+45, 0+92, 1+95, 2+21, 3+11

TOTAL: 7 EA

CEMENTITIOUS MANHOLE LINING

SUBBASIN	STREET/LOCATION	MH	MH DEPTH (VF)
9	FAIRLAWN DRIVE	31-23	9.1
9	FAIRLAWN DRIVE	31-24	10.3
9	FAIRLAWN DRIVE	31-25	10.9
9	FAIRLAWN DRIVE	31-26	10.0
9	FAIRLAWN DRIVE	31-27	7.8
9	FAIRLAWN DRIVE	31-28	4.9
9	EDGEWOOD DRIVE	31-30	8.4
9	EDGEWOOD DRIVE	31-31	7.0
9	HIGHFIELD DRIVE	31-32	8.5
9	HIGHFIELD DRIVE	31-33	7.9
9	HIGHFIELD DRIVE	31-34	7.5
9	HIGHFIELD DRIVE	31-35	7.8
9	HIGHFIELD DRIVE	31-36	7.5
9	HIGHFIELD DRIVE	31-37	7.2
9	HIGHFIELD DRIVE	31-38	7.8
9	HIGHFIELD DRIVE	31-39	7.9
9	HIGHFIELD DRIVE	31-40	10.0
9	EDGEWOOD DRIVE	31-42	10.0
9	EDGEWOOD DRIVE	31-43	6.8
9	EDGEWOOD DRIVE	31-49	7.4
9	EDGEWOOD DRIVE	31-50	8.2
9	TORRINGFORD WEST STREET	31-58	6.9
9	TORRINGFORD WEST STREET	31-59	10.0
9	TORRINGFORD WEST STREET	31-60	10.4
9	TORRINGFORD WEST STREET	31-61	8.2
9	TORRINGFORD WEST STREET	31-62	8.1
9	MORNINGSIDE DRIVE	32B-1	10.0
9	MORNINGSIDE DRIVE	32B-2	10.0
9	SUNRISE DRIVE	32B-2F	7.4
9	SUNRISE DRIVE	32B-2G	7.6
9	HARVARD DRIVE ROW	32B-14	10.0
9	HARVARD DRIVE	32B-5	10.0
9	HARVARD DRIVE	32B-17	10.0
9	HARVARD DRIVE	32B-18	11.0
9	HARVARD DRIVE	32B-20	10.0
9	HARVARD DRIVE	32B-22	8.4
9	HARVARD DRIVE	32B-24	7.2

TOTAL: 318.1 VF

Weston&Sampson®
273 Dividend Road, Rocky Hill, CT 06067
(860) 513-1473 (800) SAMPSON
www.westonandsampson.com

No.	Date	Dr.By	Ck.By	App.By	Description
A	P	P	R	O	V E D

REGISTERED PROFESSIONAL ENGINEER
May 9, 2016
DATE

CITY OF TORRINGTON, CONNECTICUT
DEPARTMENT OF PUBLIC WORKS – WATER POLLUTION CONTROL AUTHORITY
EAST TORRINGTON SEWER REHABILITATION PRJECT

SUBBASIN 9
REHABILITATION LOCATION PLAN AND TABLES

SEWER REHAB.DWG

FILE NAME	JOB NO.	SCALE	DR.BY	DSN.BY	CHK.BY	APP.BY
	2130392	1"=200'	DCM	DCM	WGS	CBW

C-13

FILE NO.

SHEET 15 OF 18

R:\Torrington CT\Wastewater Services\Task Order 1 – Sewer Rehab\Rehab CAD\SEWER REHAB.dwg

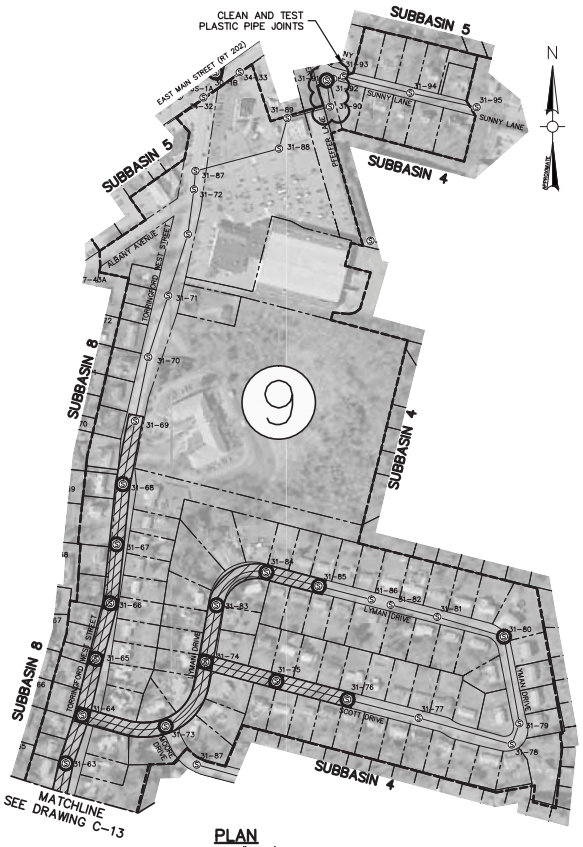

PLAN

SCALE: 1"=200'

0 200' 400' 600'

CLEAN AND TEST JOINTS

SUBBASIN	STREET/ LOCATION	FROM MH	TO MH	PIPE DIA. (IN)	PIPE MAT.	APPROX. LENGTH (FT)	APPROXIMATE STATION	
							FROM	TO
9	PFEFFER LANE	31-90	31-91	8	PVC	91	0+00	0+91
9	PFEFFER LANE	31-91	31-92	8	PVC	23	0+00	0+23
9	PFEFFER LANE	31-92	31-93	8	PVC	37	0+00	0+37

TOTAL: 151 LF

CUT PROTRUDING SERVICE

SUBBASIN	STREET/ LOCATION	FROM MH	TO MH	PIPE DIA. (IN)	PIPE MAT.	APPROX. LENGTH (FT)	APPROXIMATE STATION		PROTRUDING SERVICE
							FROM	TO	APPROXIMATE STA
9	LYMAN DRIVE	31-84	31-83	8	VC	229	0+00	2+29	1+11
9	LYMAN DRIVE	31-85	31-84	8	VC	187	0+00	1+87	0+95, 1+56

TOTAL: 3 EA

CIPP LINING

SUBBASIN	STREET/ LOCATION	FROM MH	TO MH	PIPE DIA. (IN)	MAT.	APPROX. LENGTH (FT)	APPROX. STATION		REINSTATE SERVICE
							FROM	TO	APPROX. STA
9	TORRINGFORD WEST STREET	31-63	31-62	8	VC	177	0+00	1+77	0+15, 0+80, 0+83
9	TORRINGFORD WEST STREET	31-64	31-63	8	VC	178	0+00	1+78	0+94, 1+72
9	TORRINGFORD WEST STREET	31-65	31-64	8	VC	203	0+00	2+03	0+32, 0+60, 0+80, 1+10, 1+63
9	TORRINGFORD WEST STREET	31-66	31-65	8	VC	190	0+00	1+90	0+26, 0+57, 1+11, 1+55, 1+87
9	TORRINGFORD WEST STREET	31-67	31-66	8	VC	211	0+00	2+11	0+11, 0+18, 0+90, 1+05, 1+61, 1+95
9	TORRINGFORD WEST STREET	31-68	31-67	8	VC	209	0+00	2+09	0+66, 0+73, 0+92, 1+40
9	TORRINGFORD WEST STREET	31-69	31-68	8	VC	223	0+00	2+23	0+70, 1+64, 1+77
9	LYMAN DRIVE	31-73	31-64	8	VC	300	0+00	3+00	0+29, 0+47
9	LYMAN DRIVE	31-74	31-73	8	VC	272	0+00	2+72	0+11, 1+32, 1+43, 2+07
9	SCOTT DRIVE	31-75	31-74	8	VC	250	0+00	2+50	RE-INSPECT BEFORE LINING
9	SCOTT DRIVE	31-76	31-75	8	VC	253	0+00	2+53	0+26, 0+77, 1+08, 1+59, 1+90, 2+37
9	LYMAN DRIVE	31-83	31-74	8	VC	202	0+00	2+02	0+56, 0+67, 1+39, 1+50
9	LYMAN DRIVE	31-84	31-83	8	VC	229	0+00	2+29	0+36, 1+10, 1+11, 1+99
9	LYMAN DRIVE	31-85	31-84	8	VC	187	0+00	1+87	0+08, 0+59, 0+75, 0+95, 1+31, 1+56, 1+79

TOTAL: 3,084 LF

CEMENTITIOUS MANHOLE LINING

SUBBASIN	STREET/LOCATION	MH	MH DEPTH (VF)
9	TORRINGFORD WEST STREET	31-63	7.9
9	TORRINGFORD WEST STREET	31-64	7.4
9	TORRINGFORD WEST STREET	31-65	7.2
9	TORRINGFORD WEST STREET	31-66	8.3
9	TORRINGFORD WEST STREET	31-67	8.2
9	TORRINGFORD WEST STREET	31-68	9.0
9	LYMAN DRIVE	31-73	7.9
9	LYMAN DRIVE	31-74	6.5
9	SCOTT DRIVE	31-75	7.2
9	SCOTT DRIVE	31-76	10.0
9	LYMAN DRIVE	31-83	6.8
9	LYMAN DRIVE	31-84	6.4
9	LYMAN DRIVE	31-85	6.3
9	SUNNY LANE	31-91	8.3

TOTAL: 107.4 VF

LEGEND

DESCRIPTION	SYMBOL
SANITARY SEWER	
SANITARY SEWER MANHOLE	0-00
PROPERTY LINE	
LIMITS OF SUBBASIN	
CIPP LINING	
MANHOLE REHABILITATION	

REBUILD BENCH/INVERT

SUBBASIN	STREET/LOCATION	MH	MH DEPTH (VF)
9	TORRINGFORD WEST STREET	31-64	7.4

TOTAL: 1 EA

Weston&Sampson®
273 Dividend Road, Rocky Hill, CT 06067
(860) 513-1473 (800) SAMPSON
www.westonandsampson.com

No.	Date	Dr.By	Ck.By	App.By	Description
A		P	R	O	V E D

May 9, 2016
DATE

REGISTERED PROFESSIONAL ENGINEER

CITY OF TORRINGTON, CONNECTICUT
DEPARTMENT OF PUBLIC WORKS – WATER POLLUTION CONTROL AUTHORITY
EAST TORRINGTON SEWER REHABILITATION PROJECT

SUBBASIN 9
REHABILITATION LOCATION PLAN AND TABLES

FILE NAME	JOB NO.	SCALE	DR.BY	DSN.BY	CHK.BY	APP.BY
SEWER REHAB.DWG	2130392	1"=200'	DCM	DCM	WGS	CBM

C-14

FILE NO.

SHEET 16 OF 18

R:\Torrington CT\Wastewater Services\Task Order 1 – Sewer Rehab\Rehab CAD\SEWER REHAB.dwg

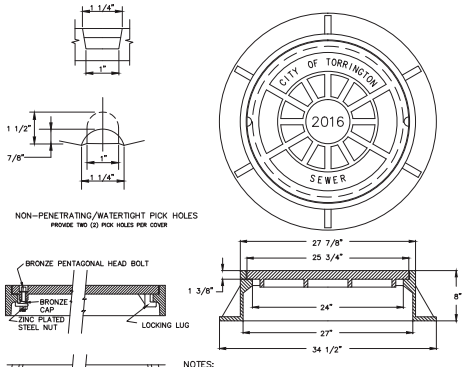

NOTES:
1. MANHOLE FRAME EQUAL TO CAMPBELL FOUNDRY PATTERN NO. 1009.
2. MANHOLE COVER EQUAL TO CAMPBELL FOUNDRY PATTERN NO. 1203.
3. BEARING SURFACE (COVER TO FRAME) TO BE MACHINED FOR FIT.
4. MATERIAL TO BE GRAY CAST IRON. ASTM A48-83, CLASS 30B
5. CASTINGS TO MEET AASHTO HS-20-44 (M818) HIGHWAY LOADINGS.
6. ALL TEXT SHOWN ON COVER TO BE 1 1/2" HIGH, DATE IN CENTER TO BE YEAR COVER INSTALLED.
7. COVER IN OFF STREET RIGHTS-OF-WAY AND AS NOTED ON THE PLANS SHALL HAVE TYPE A CAMLOCK PROVISIONS.

MANHOLE FRAME AND COVER

N.T.S.

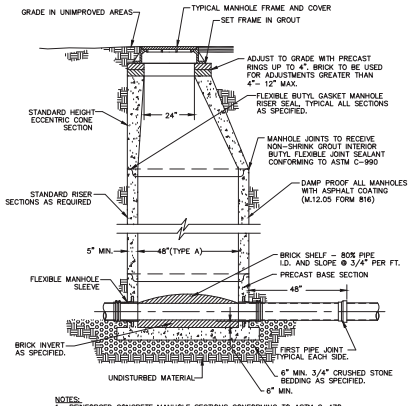

NOTES:
1. REINFORCED CONCRETE MANHOLE SECTIONS CONFORMING TO ASTM C-478.
2. RUBBER LIFT HOLE PLUGS TO BE INSERTED FROM THE OUTSIDE AND HOLE FILLED WITH NON-SHRINK INSIDE AND OUTSIDE.
3. TYPE "A" MANHOLE SHALL BE 48" IN DIAMETER.
4. THERE WILL BE NO STEPS IN ANY MANHOLE.
5. VACUUM TEST REQUIRED.
6. RISER SHALL CONTAIN NO INTERIOR STEPS OR HOLES FOR STEPS.

PRECAST MANHOLE

N.T.S.

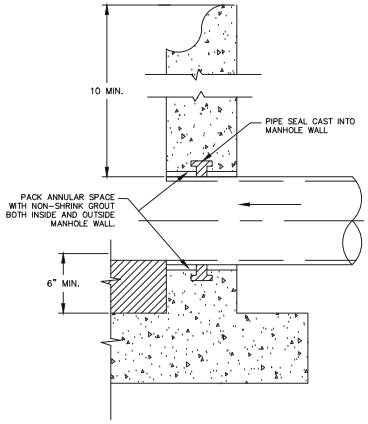

PRECAST MANHOLE CONNECTION

N.T.S.

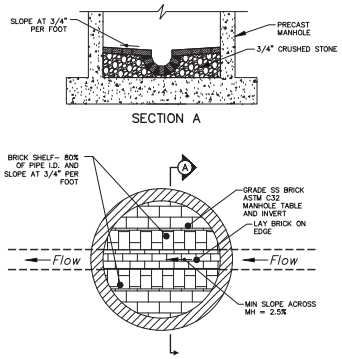

MANHOLE INVERT

N.T.S.

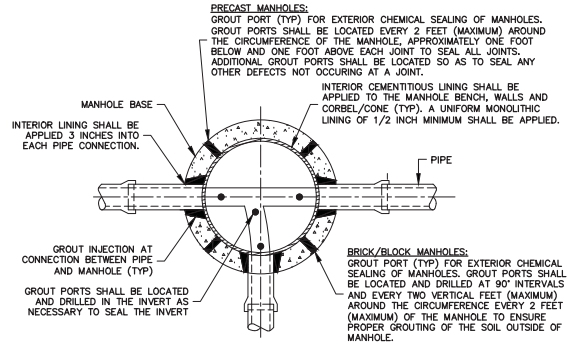

MANHOLE REHABILITATION PLAN

N.T.S.

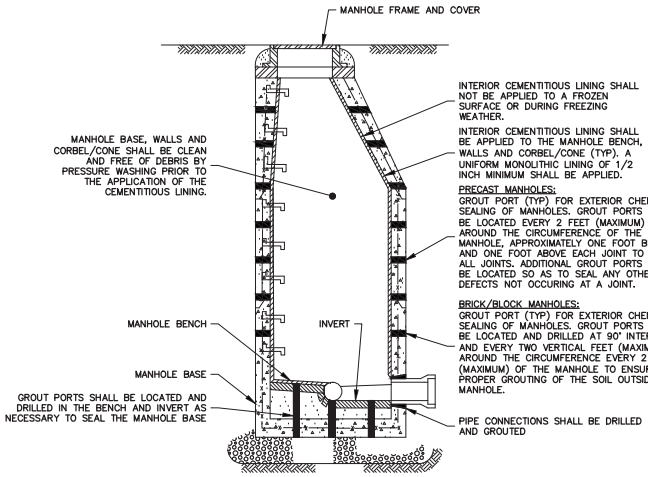

MANHOLE REHABILITATION DETAIL

N.T.S.

Weston&Sampson®
273 Dividend Road, Rocky Hill, CT 06067
(860) 513-1473 (800) SAMPSON
www.westonandsampson.com

No.	Date	Dr.By	Ck.By	App.By	Description
A		P	P	R	O V E D

May 9, 2016
DATE

REGISTERED PROFESSIONAL ENGINEER

CITY OF TORRINGTON, CONNECTICUT
DEPARTMENT OF PUBLIC WORKS - WATER POLLUTION CONTROL AUTHORITY
EAST TORRINGTON SEWER REHABILITATION PRJECT

DETAILS

FILE NAME	JOB NO.	SCALE	DR.BY	DSN.BY	CHK.BY	APP.BY
SEWER REHAB.DWG	2130392	AS NOTED	DCM	DCM	WGS	CBM

C-15

FILE NO.

SHEET 17 OF 18

R:\Torrington CT\Wastewater Services\Task Order 1 - Sewer Rehab\Rehab CAD\SEWER REHAB.dwg

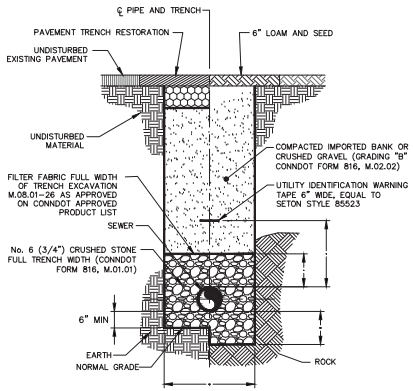

NOTES:
1. MATERIALS EXCAVATED ABOVE NORMAL GRADE SHALL BE REMOVED AND PROPERLY DISPOSED OF AND REPLACED WITH MATERIALS AS SPECIFIED AND AS SHOWN ON THE DRAWINGS.
2. BEDDING TO BE 6" OF 3/4" CRUSHED STONE.
3. UNSUITABLE MATERIAL BELOW NORMAL GRADE SHALL BE REPLACED WITH NO. 6 (3/4") CRUSHED STONE (DOT FORM 816, ART. M.01.01) AS REQUIRED BY THE CITY ENGINEER.
4. SOLID-SLEEVE COUPLING SHALL BE USED WHEN CONNECTING PROPOSED SEWER TO EXISTING PVC SEWER. DOUBLE-STRAPPED FERNCO OR APPROVED EQUIVALENT SHALL BE USED ON CONNECTIONS TO ALL OTHER SEWER PIPE
5. ALL WORK MUST BE CONDUCTED IN STRICT ACCORDANCE WITH THE LATEST REGULATIONS OF OCCUPATIONAL SAFETY AND HEALTH ADMINISTRATION (OSHA) FOR EXCAVATIONS.

SANITARY SEWER TRENCH
N.T.S.

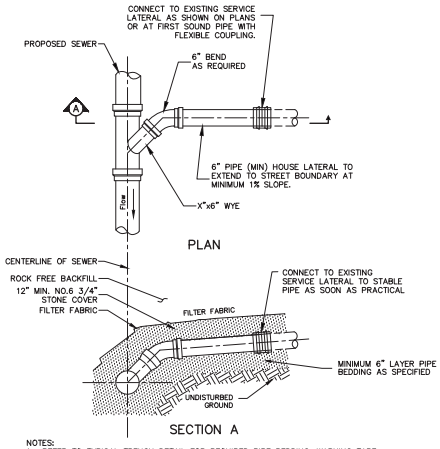

NOTES:
1. REFER TO TYPICAL TRENCH DETAIL FOR REQUIRED PIPE BEDDING, WARNING TAPE, AND RESTORATION REQUIREMENTS.
2. MAXIMUM BEND SHALL NOT EXCEED 22.5°.
3. PVC PIPE SHALL CONFORM TO ASTM D-3034 SDR35.
4. REFER TO TYPICAL TRENCH DETAIL SHEET FOR FILTER FABRIC, UTILITY IDENTIFICATION.
5. SOLID-SLEEVE COUPLING SHALL BE USED WHEN CONNECTING PROPOSED SEWER TO EXISTING PVC SEWER. DOUBLE-STRAPPED FERNCO OR APPROVED EQUIVALENT SHALL BE USED ON CONNECTIONS TO ALL OTHER SEWER PIPE

STANDARD LATERAL INSTALLATION
N.T.S.

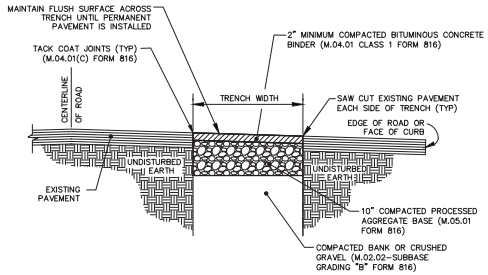

TEMPORARY TRENCH PAVEMENT REPAIR
N.T.S.

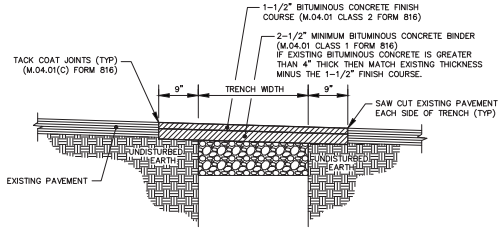

NOTES:
1. PERMANENT PAVEMENT REPAIR SHALL BE COMPLETED BETWEEN 6 AND 12 MONTHS AFTER TEMPORARY PAVEMENT REPAIR IS INSTALLED.
2. SHORING REQUIRED PER OSHA STANDARDS.
3. IF EDGE OF TRENCH IS WITHIN TWO (2) FEET OF CURBED GUTTER LINE OR UNPAVED SHOULDER, THEN REMOVE AND REPLACE PAVEMENT.

PERMANENT TRENCH PAVEMENT REPAIR – LOCAL ROAD
N.T.S.

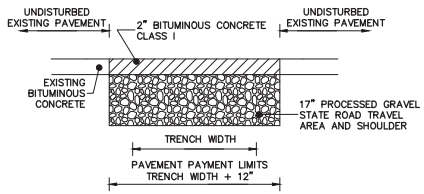

TEMPORARY TRENCH PAVEMENT DETAIL STATE ROAD TRAVEL AREA AND SHOULDER
N.T.S.

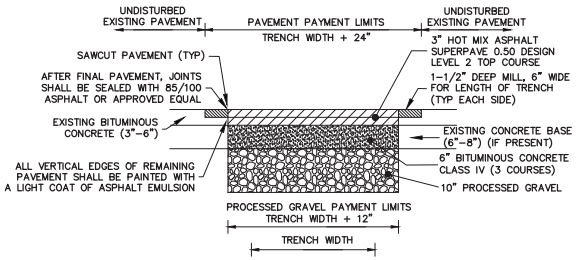

PERMANENT TRENCH PAVEMENT DETAIL STATE ROAD TRAVEL AREA AND SHOULDER
N.T.S.

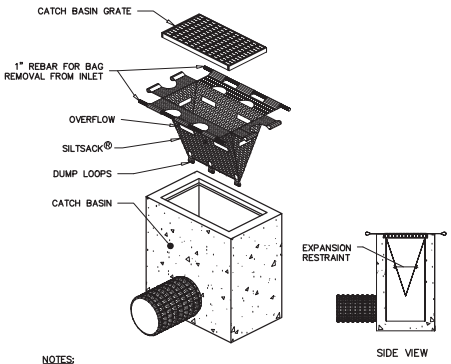

NOTES:
1. PROVIDE HI-FLOW SILT SACK TYPE A FOR TYPE "C-L" CATCH BASIN TOPS AND TYPE B WITH CURB DEFLECTOR FOR TYPE "C" CATCH BASIN TOPS OR OTHER STRUCTURES WITH CURB INLET.

CATCH BASIN INLET PROTECTION
N.T.S.

Weston&Sampson®
273 Dividend Road, Rocky Hill, CT 06067
(860) 513-1473 (800) SAMPSON
www.westonandsampson.com

No.	Date	Dr.By	Ck.By	App.By	Description
A		P	P	R	O V E D

Mar 9, 2016
DATE

REGISTERED PROFESSIONAL ENGINEER

CITY OF TORRINGTON, CONNECTICUT
DEPARTMENT OF PUBLIC WORKS – WATER POLLUTION CONTROL AUTHORITY
EAST TORRINGTON SEWER REHABILITATION PROJECT

DETAILS

FILE NAME	JOB NO.	SCALE	DR.BY	DSN.BY	CHK.BY	APP.BY
SEWER REHAB.DWG	2130392	AS NOTED	DCM	DCM	WCS	CBM

C-16

FILE NO.

R:\Torrington CT\Wastewater Services\Task Order 1 – Sewer Rehab\Rehab CAD\SEWER REHAB.dwg