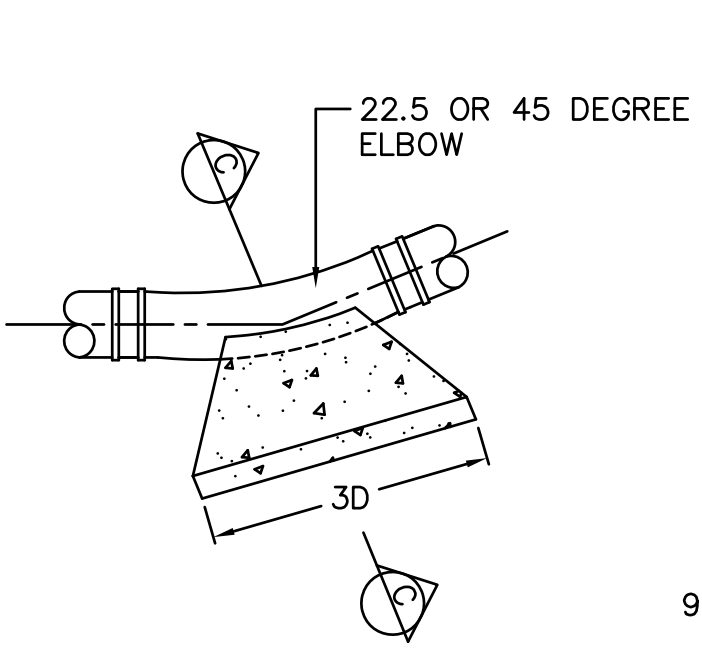


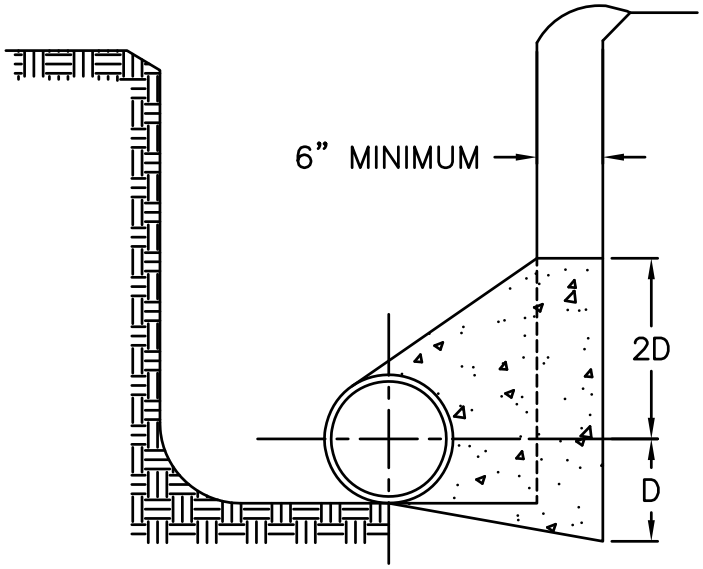


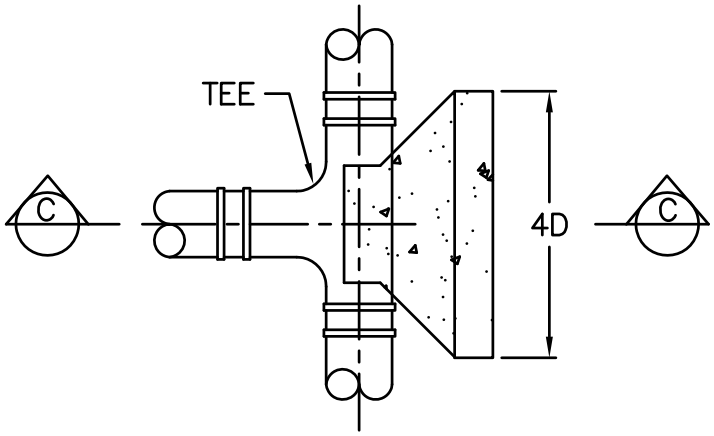


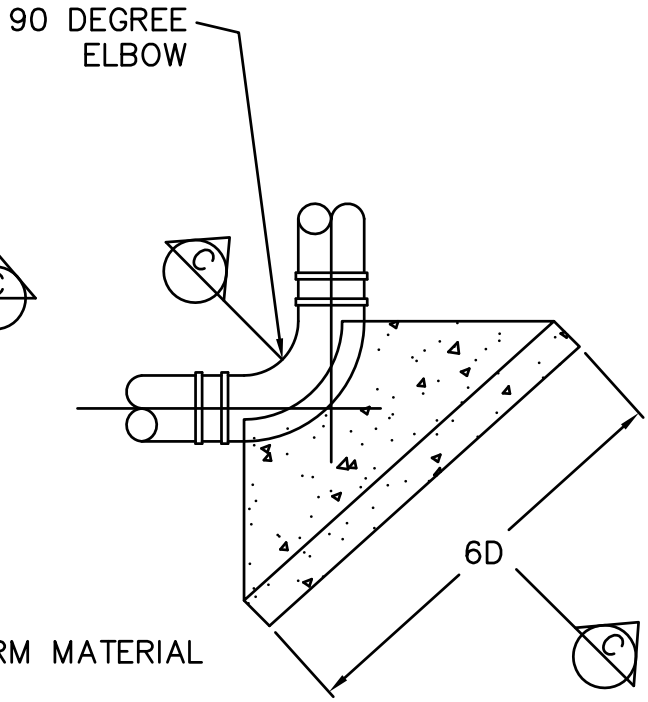


NOTES:

1. TRENCH SHALL BE EXCAVATED TO FIRM MATERIAL PRIOR TO PLACING CONCRETE.
2. ALL CONCRETE SHALL BE CLASS "A"
3. ALL CONCRETE THRUST BLOCKS SHALL BE FORMED AS SHOWN.
4. DIMENSIONS SHOWN AS "4D" TO BE 4 TIMES THE OUTSIDE PIPE DIAMETER.

| | |
|---|---|
| SCALE N.T.S. | CITY OF TORRINGTON Engineering Department |
| APRROVED E.J.F | |
| RV. DATE | CONCRETE THRUST BLOCKS |
| JAN. 2002 | |
| JUL. 2010 | |
| AUG. 2011 | |

SECTION 6.3